Instrumentation-Grade Shear Stress Sensors for Direct Measurement of Mean and Fluctuating Skin Friction

Tai-An Chen[1], Casey Barnard[2], David Mills[1]

Stephen Horowitz[1*], Mark Sheplak[1,2]

20th Test Instrumentation Workshop (ITEA)

Date: 5/12/2016

[1]IC2
[2]University of Florida (UF)
[*]Presenter

Outline

- Motivation and Background
  - Wall shear stress – what is it and why do we care?
  - Current measurement techniques
- Sensor Development
- Test and Calibration
- Summary

Wall shear stress

- Wall shear stress results from molecular interactions at fluid-solid interface
  - No-slip condition
- On continuum scale can view as point force vectors proportional to velocity gradient
- Why measure wall shear stress?
  - Fundamental fluid measurements
  - Friction velocity value needed for normalization of boundary layer data
  - Quantify drag mitigation efforts
  - Feedback in flow control applications

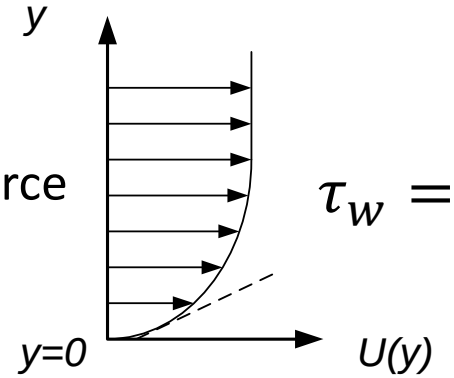

$$\tau_w = \mu \left.\frac{dU}{dy}\right|_{y=0}$$

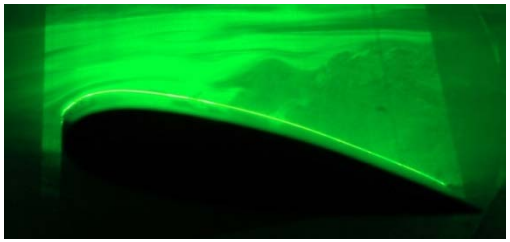

Measurement techniques - indirect

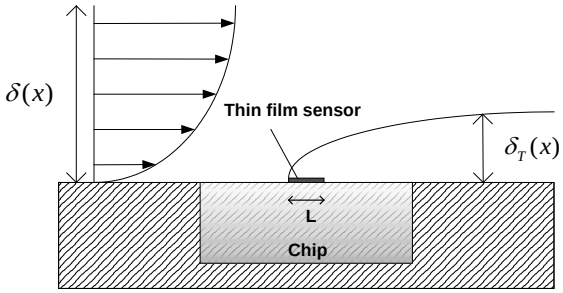

- Wall shear stress estimate based on correlation from other measured quantity
- Pressure drop
  - Preston tubes, Stanton tubes, razor blades, fences
- Velocity profile
  - Hotwire, Pitot probe, Optical (PIV, LDV, etc)
- Thermal transfer
  - Hotfilm
- Difficulty with resolution
- Require extensive calibration
- Applicable to subset of flows

Measurement techniques - direct

- Physical displacement of element due to shear stress
  - Pros:
    - Direct Measurement
      - No correlation needed
      - No in-situ calibration needed
    - Directional Measurement
  - Cons:
    - Alignment
    - Fragile
    - Gaps collect debris
- Transduction types
  - Optical
  - Piezoresistive
  - Capacitive

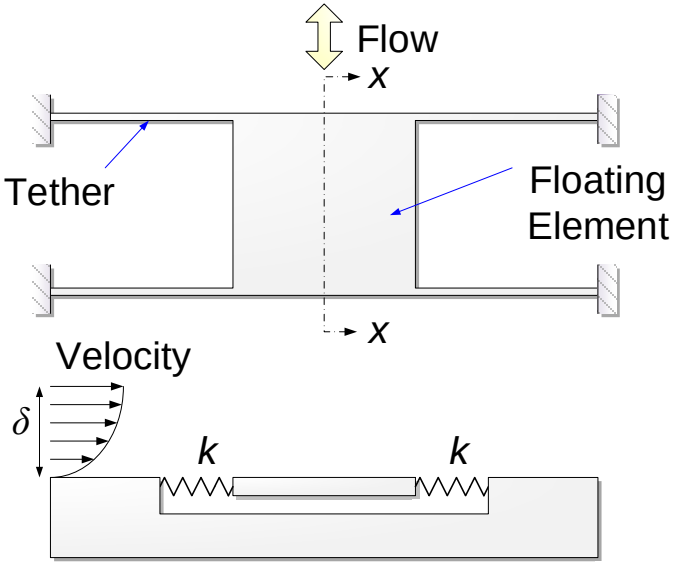

Currently no direct time resolved measurement tool available for complex 3-dimensional flows

Our Approach

- **OUR TECHNOLOGY**
  - MEMS-based, floating-element capacitive shear stress sensor
  - Thermally compensated, robust sensor package
  - Optimized interface circuitry for high dynamic range and bandwidth

- **BENEFITS**
  - Simultaneous mean & fluctuating measurements
  - Time-resolved, direct measurement of shear stress
    - Does not require unique calibration to heat transfer
    - Improved accuracy and reduced uncertainty
  - High temporal (> 5 KHz BW) & spatial resolution (< 1mm)
  - Non-intrusive, can mount flush to test models and wind-tunnels for minimal flow disturbance and impact

Outline

- Motivation and Background
- Sensor Development
  - Design
  - Sensor Fabrication
  - Packaging
- Test and Calibration
- Summary

System Overview

- Components
  - Capacitive shear stress sensor
  - Sensor packaging
  - Interface circuitry

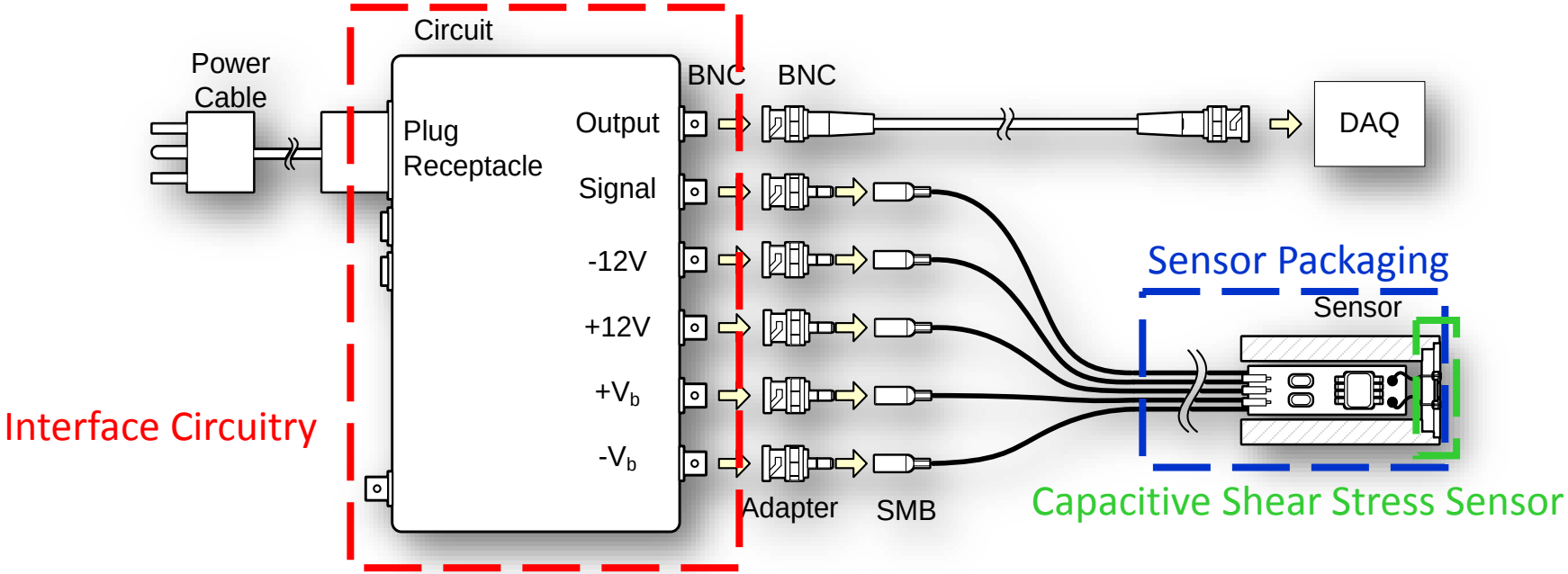

CSSS Transduction

- Capacitive based, floating element shear stress sensor
  - Interdigitated capacitive comb fingers
  - Electrical connections achieved via wire-bonds
    - Through silicon vias (TSVs) approach is currently in development

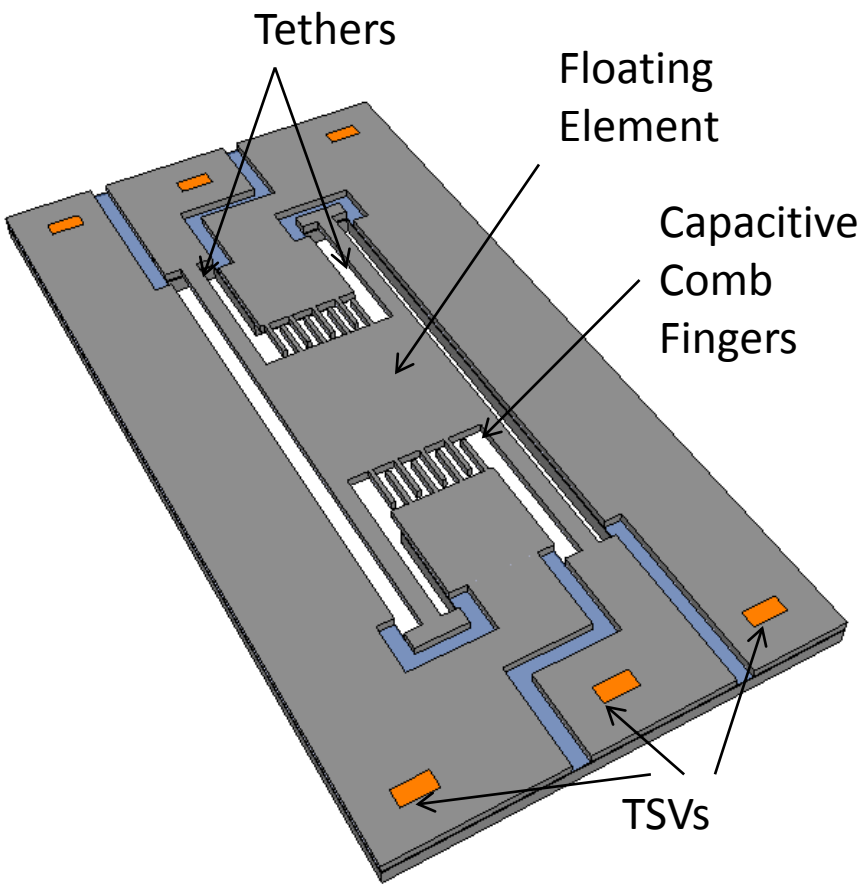

CSSS Operation

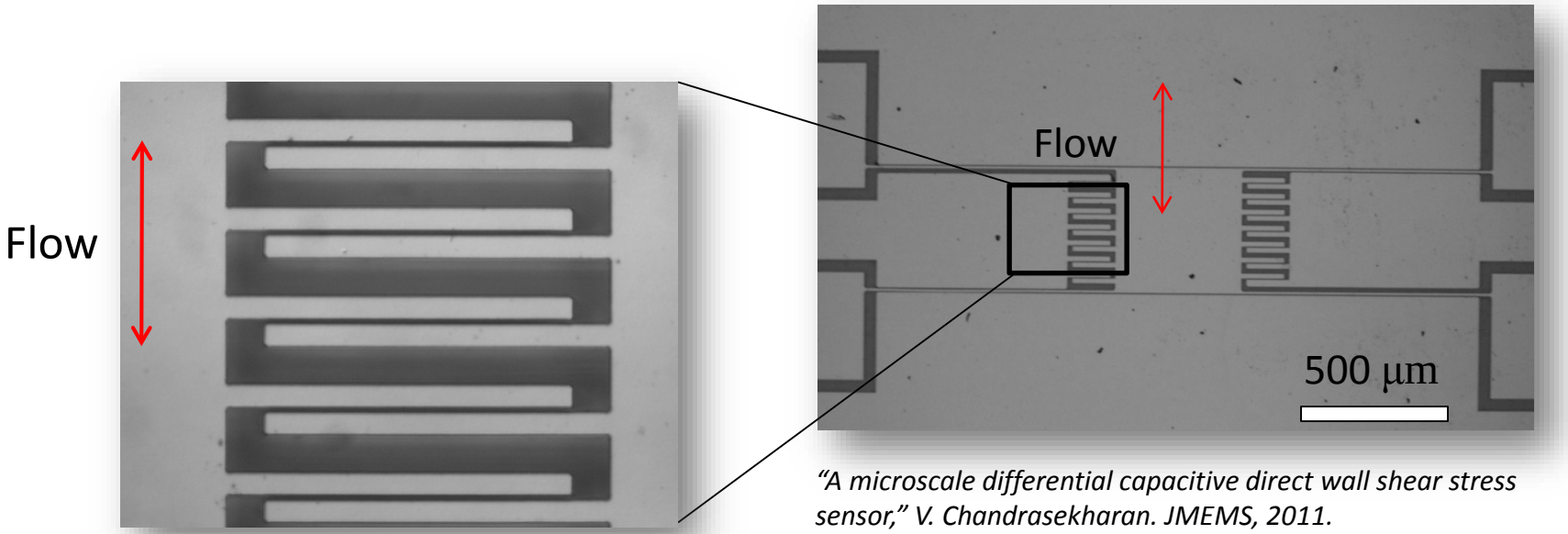

"A microscale differential capacitive direct wall shear stress sensor," V. Chandrasekharan. JMEMS, 2011.

- Flow displaces floating element
- Fingers create parallel plate capacitors
- Gaps between fingers change
- Results in change in capacitance

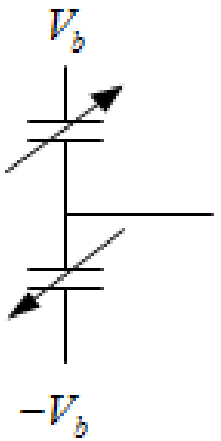

$$V_{out} = \frac{2\Delta C}{C_0} V_b$$

Real-Time Capacitance Measurement

- Capacitance Measurement
  - V_{bias} → sensor acts as impedance bridge
    - Impedance of capacitor at dc → doesn't exist
    - Need add frequency content for dc sensing
- Modulate output of sensor
  - Bias frequency

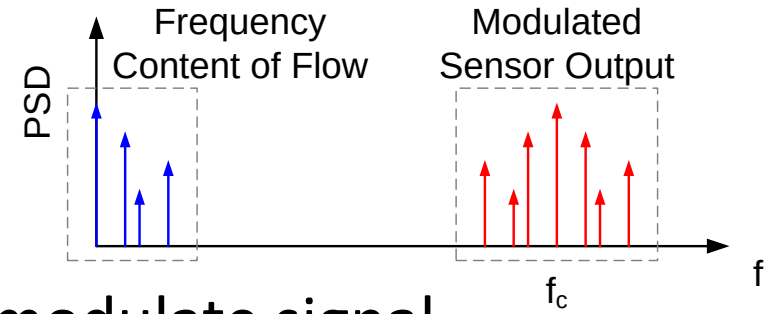

- Demodulate signal
  - Recover baseband signal

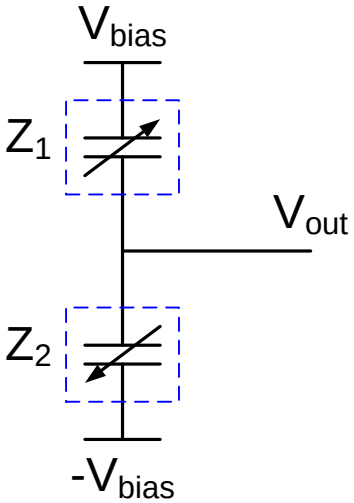

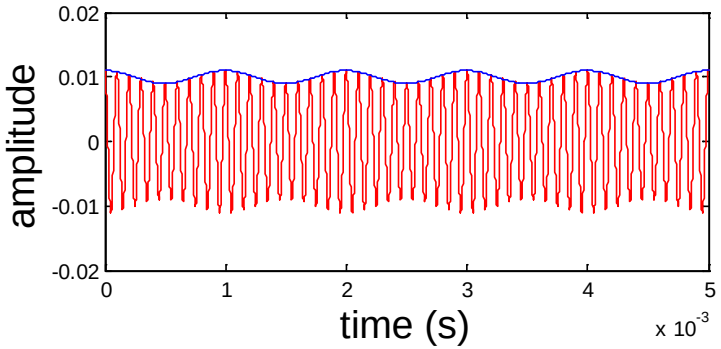

Interface Circuitry

- Function
  - Provides modulated bias voltages to the capacitive sensor
  - Powers the buffer amp
  - Demodulates the signal from the sensor
  - Outputs the signal to DAQ

- Circuits are tuned and calibrated with an assigned shear stress sensor package

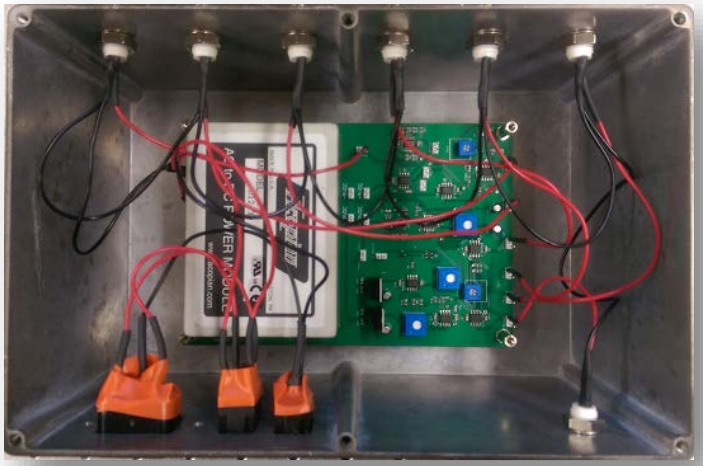

Sensor Packaging

- Package Description
  - Shear stress sensor wire-bonded to PCB endcap
  - Stainless steel cylindrical housing
    - 0.5” diameter x 2” long
  - Recessed area in housing for PCB
  - Laser micromachined shim cap

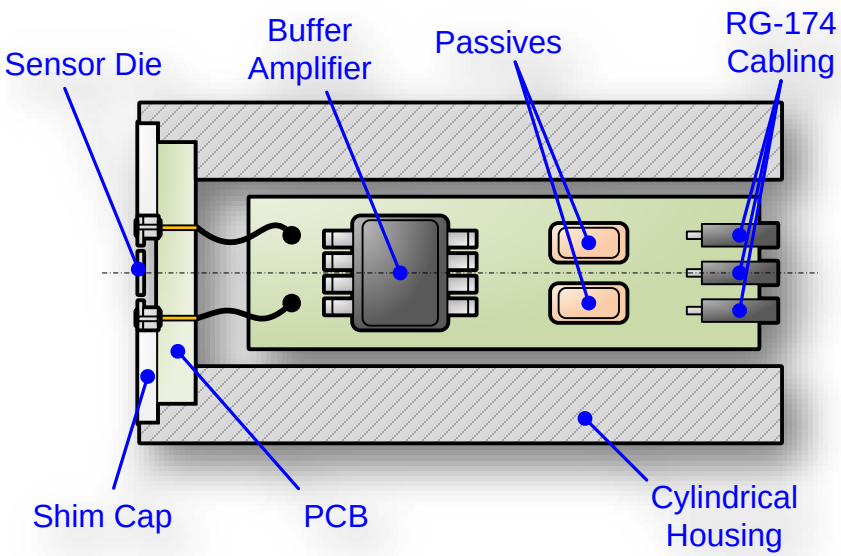

Outline

- Motivation and Background
- Sensor Development
- Test and Calibration
  - Calibration
    - Static
    - Dynamic
  - Wind Tunnel Testing
    - Setup
    - Results
  - Cable Testing
  - Environmental Testing
- Summary

Characterization – Mean shear stress

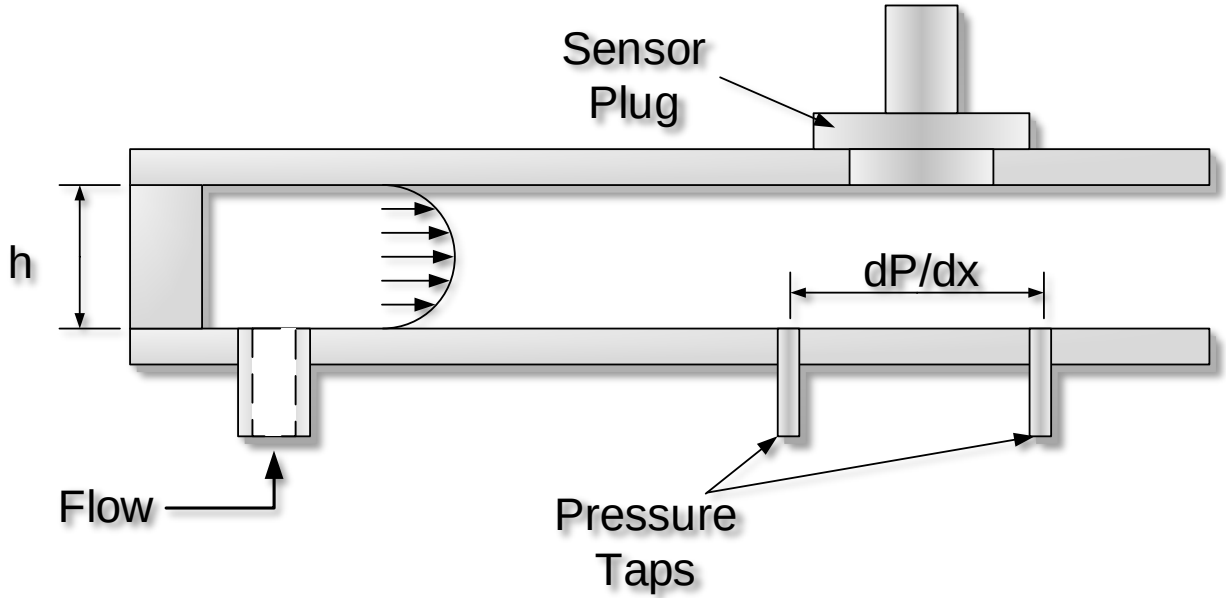

- Flow cell: assumption of fully developed incompressible two-dimensional Poiseuille channel flow with linear pressure gradient
- Adjust shear range with shim height and mass flow controller

$$\tau_w(y=0) = \frac{h}{2}\frac{dP}{dx}$$

Characterization – Dynamic shear stress

- Acoustic plane wave tube
- Compression driver establishes standing wave pattern
- Sensor placed at velocity (and shear) maxima, pressure minima
- Reference microphone in termination

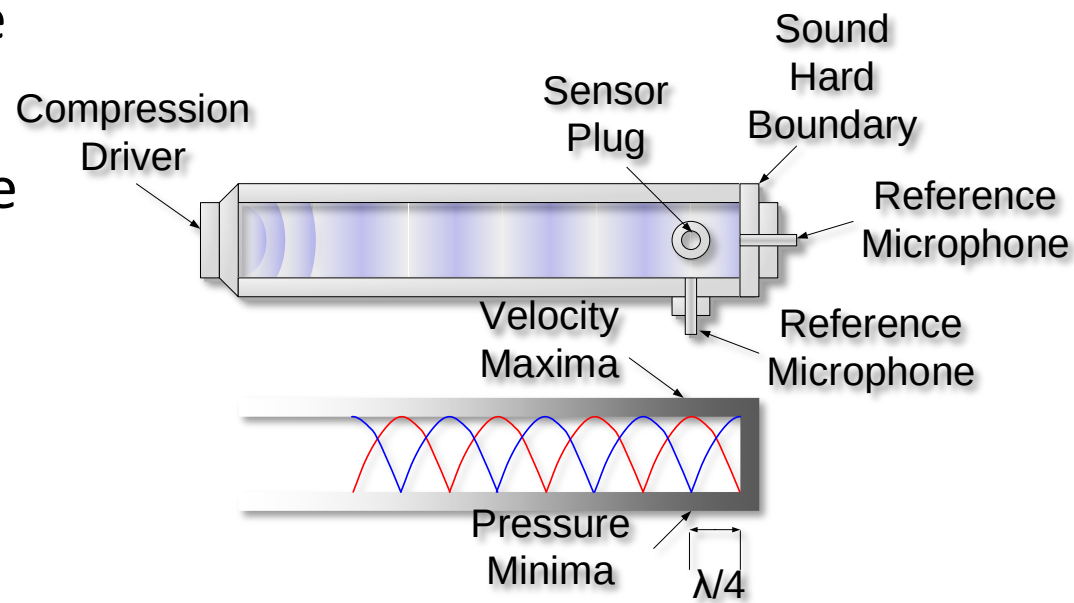

$$\tau_w(\omega = 2\pi f_{test}) = -\frac{1}{c}\sqrt{j\omega\nu}\tanh\left(a\sqrt{\frac{j\omega}{\nu}}\right)\frac{e^{jkd} - Re^{-jkd}}{e^{jk(d-\delta)} - Re^{-jk(d-\delta)}}P_{measured}e^{j\omega t}$$

Sensor Calibration

- Ran 6 full sensor systems through full calibration procedures
  - Sensitivity, noise floor, resonant frequency, drift, offset

		Sensor System					
Parameter	**Units**	**1**	**2**	**3**	**4**	**5**	**6**
Dynamic Sensitivity @ 1.128 kHz	[mV/Pa]	2.54	3.09	1.93	3.07	2.89	2.22
Nominal dc Offset	[mV]	62	142	24	3	10	470
Resonant Frequency	[kHz]	2.9	3.1	3.6	3.3	3.5	3.8
Noise Floor @ 1.128 kHz	[µV/rtHz]	2.1	0.3	0.3	0.2	0.9	0.3
Minimum Detectable Shear Stress	[µPa/rtHz]	826.8	97.1	155.4	65.1	311.4	135.1
Mean Drift per ½ hour	[mV]	±0.4	±0.3	±0.7	±0.4	±0.3	±0.8

Wind Tunnel Setup

- 6 sensor systems installed in NASA LaRC Shear Flow Wind Tunnel for testing
  - 20” x 28” cross section
  - Well characterized skin friction values
- Sensors compared against Preston tube data
- Collected static and dynamic data

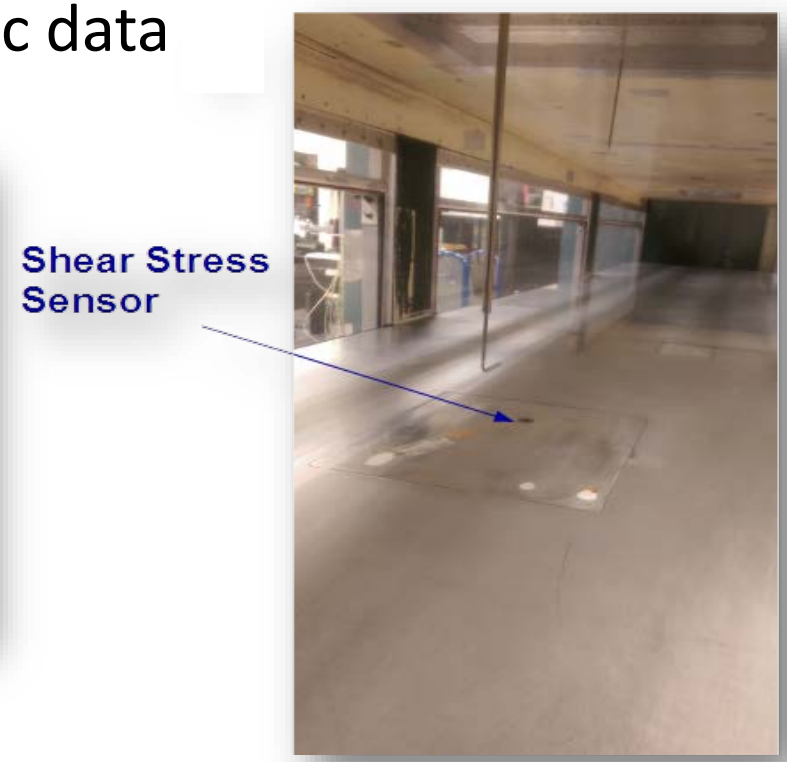

Ref: NASA NARI Seminar – “Flexible Micropost Arrays for Shear Stress Measurement”, Wohl, C. et al., 2015

20” x 28” Wind Tunnel Results

- Sensor System 5

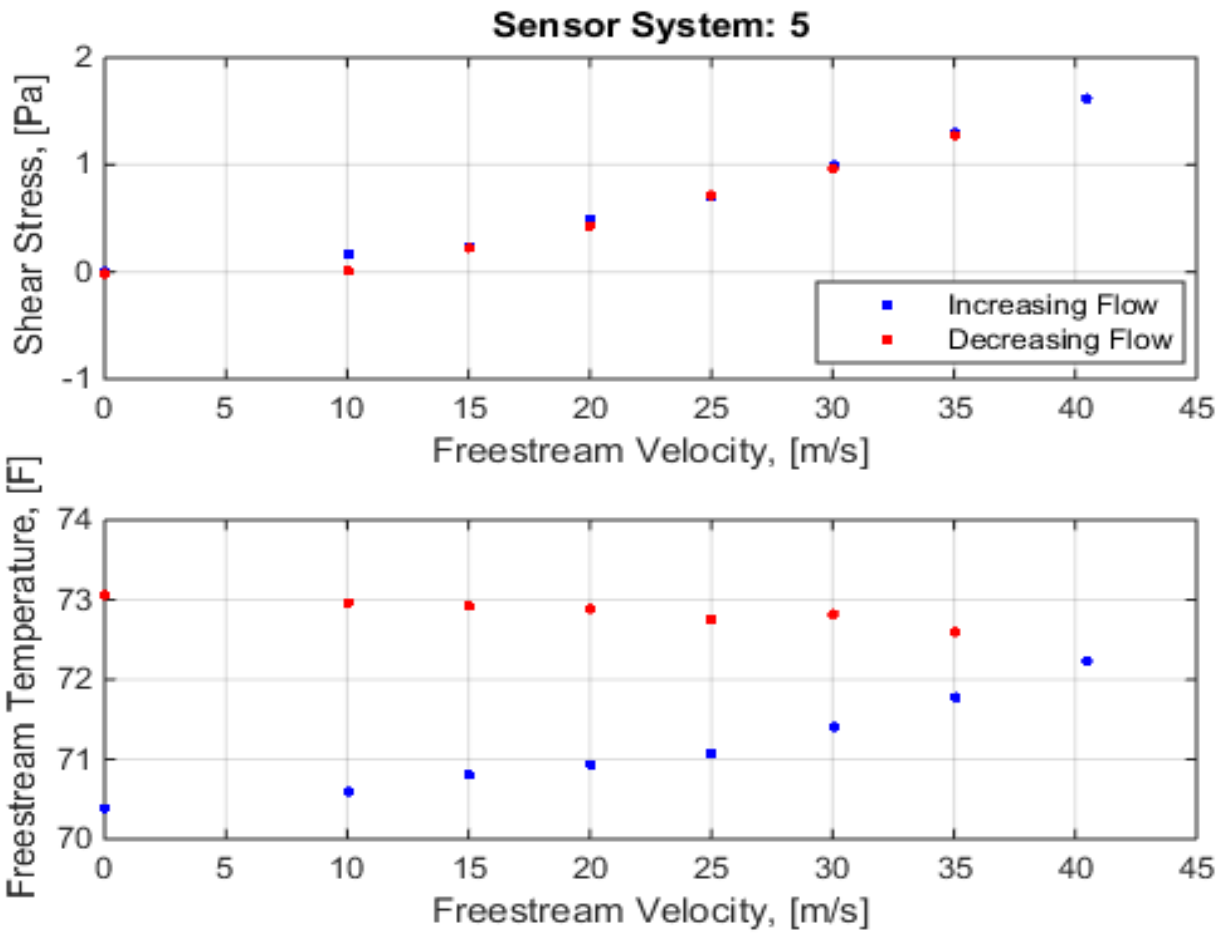

20” x 28” Wind Tunnel Results

- Sensor System 5

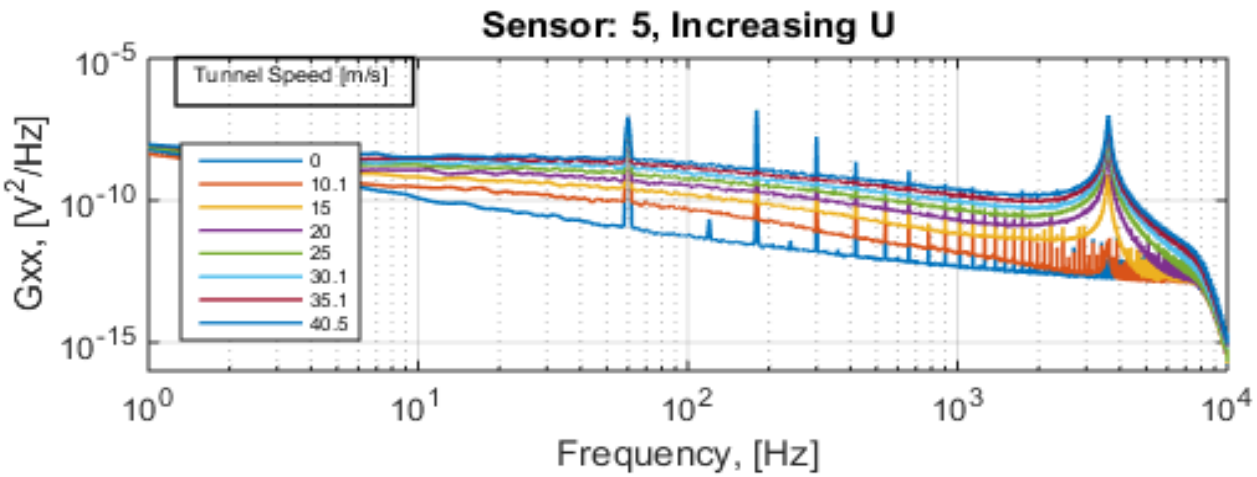

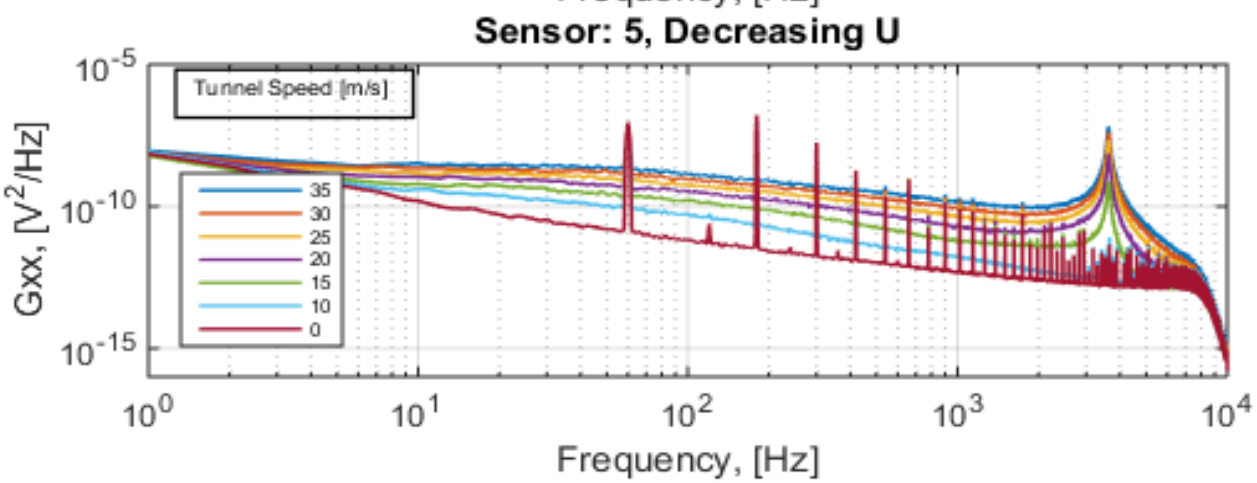

20” x 28” Wind Tunnel Results

- Sensor System 5
  - Compared with NASA Preston Tube data

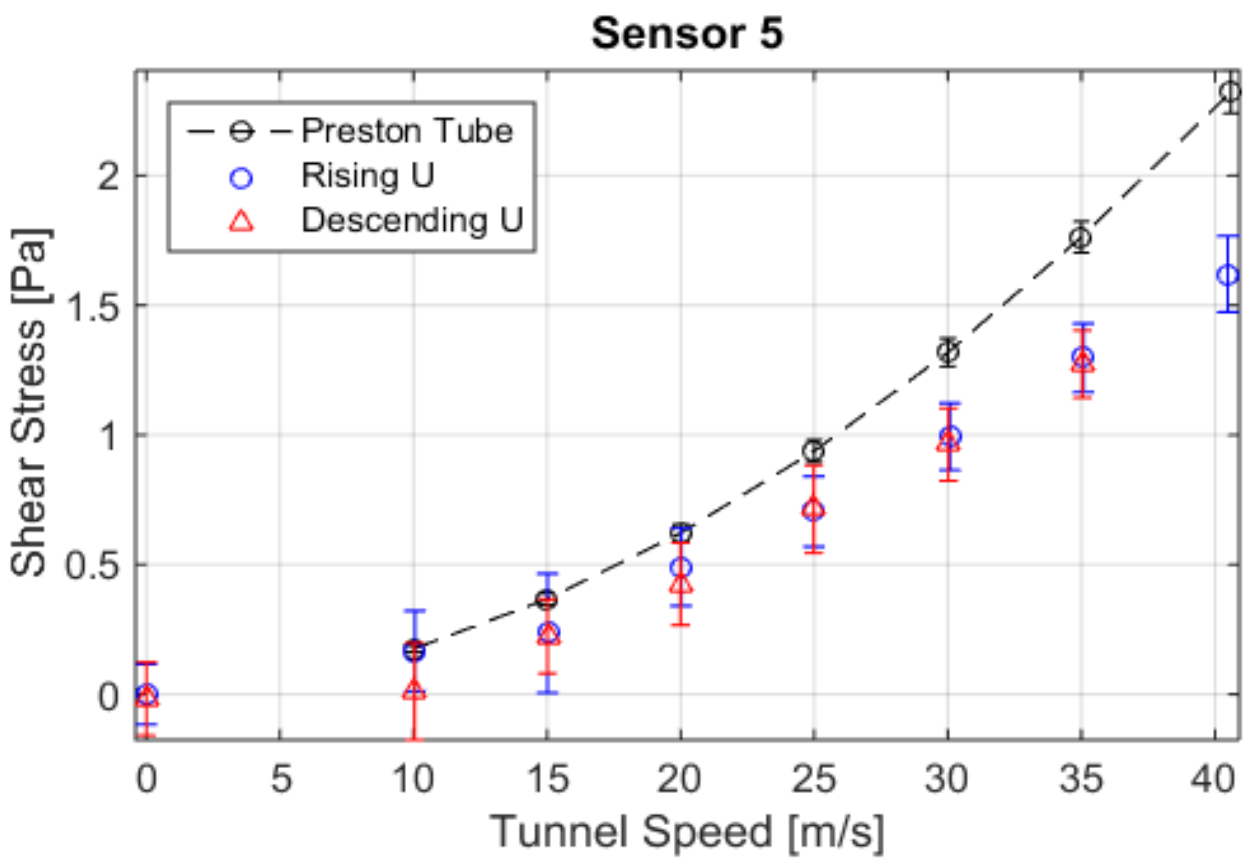

Cable Test

- Post Wind Tunnel Test
  - Cable at output of circuit instead of between circuit and sensor head (based on feedback)
  - RG-58 cable
  - Experimental results using sensor system 2

Cable Length [ft]	5	25	50	62	75	100	120
dc Offset [mV]	143.3	143.8	143.9	144.1	144.2	144.2	144.2
Sensitivity [mV/Pa]	3.19	3.20	3.19	3.20	3.19	3.19	3.20

Environmental Test

- Espec Environmental Chamber
  - Temperature 20 C to 50 C
  - Humidity: 80% to 90%

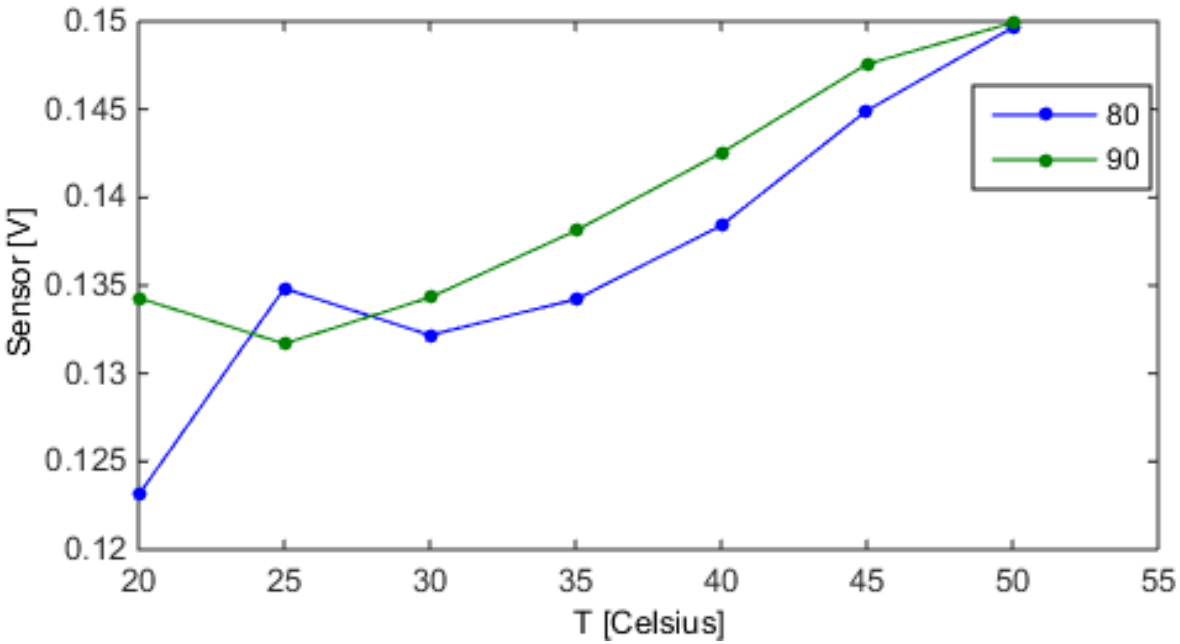

Outline

- Motivation and Background
- Sensor Development
- Test and Calibration
- Summary

Summary

- Calibrated results (typical)
  - **Shear stress sensitivity:** 2.9 mV/Pa (@1.128 kHz)
  - **Resonant Frequency:** 3.5 kHz
  - **Pressure Rejection Ratio:** 72 dB
  - **Noise Floor:** 0.9 $\mu V/Hz^{1/2}$
  - **Minimum Detectable Shear Stress:** 0.3 mPa
  - **Dynamic Range:** > 76 dB (limited by test setup)
- Sensors have also been tested in multiple flow facilities
  - Grazing flow impedance duct (GFID) @ UF
  - Merrill low speed wind tunnel @ Caltech
  - NASA Curved Duct Test Rig (CDTR) @ NASA LaRC
- Several areas identified for improvements
  - Underprediction, temperature sensitivity, wire-bonds, EMI and cabling.

Ongoing Work

- Sensors
  - Transition to TSV die
- Packaging Redesign
  - Die endcap – improve flushness, reduce thermal stress
  - Modularity
  - Single cable solution between sensor head and circuit
- Interface Circuit
  - Battery powered instead of wall outlet
- Calibration
  - Sensitivity, FRF, dc drift, environmental characterization, vibration

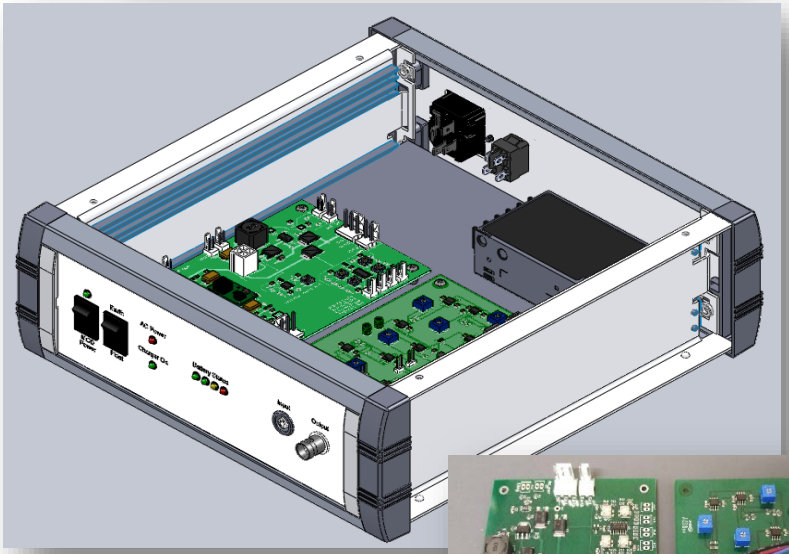

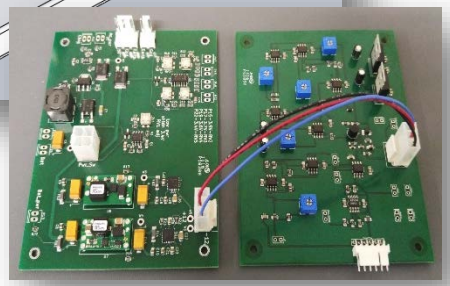

Transitioning to pilot production in 2016. Anticipate Q1 2017 commercial availability.

Acknowledgements

- Work at IC2 funded through NASA SBIRs (LaRC)
  - Phase 1, Phase 2, 2 x Phase 3s
  - Currently wrapping up second P3
- Worldwide exclusive license from UF
  - Patent #US8833175
- LaRC Support
  - Cathy McGinley
  - Luther Jenkins
  - Mike Kegerise
  - Dan Neuhart

Corporate Overview

Mission

To develop and manufacture high-performance, technologically disruptive instrumentation systems that enable the measurement, modeling, and control of various physical properties. Founded in 2001.

Staff

- 5 employees currently, growing to 6-7 within a year
- Mark Sheplak, Steve Horowitz, Tai-An Chen, David Mills, Len Kubik Jr.

Capabilities

Miniaturized instrumentation development

- High temperature, miniaturized instrumentation for aerospace applications
- Highly-resolved, high BW acoustic, pressure and shear stress measurement
- Sensors and systems for vehicle and propulsion system design, diagnostics and prognostics
- Optical, capacitive and piezoelectric transducers

Engine Noise reduction

- Acoustic engine liners

Past Efforts

9 P1s, 2 P2s, 1 P3 SBIR/STTRs (NASA, AF, Army)

Current Efforts

3 Phase 2 SBIR/STTRs

- Highly-Resolved Wall-Shear-Stress Measurement in High Speed Flow (AFOSR)
- Flexible, compact acoustic transducer arrays (Army)
- Miniaturized Dynamic Pressure Sensor Arrays with Sub-Millimeter (mm) Spacing for Cross-Flow Transition Measurements (NASA) – ***P2 Pending***

1 Phase 3 SBIR (NASA)

- Subsonic Wind Tunnel Experiments: Upgraded Skin Friction Sensor Hardware, and Experiment Design.

Customers/Partners

Company:
Interdisciplinary Consulting Corp. (IC2)
5745 SW 75th St, #364, Gainesville, FL 32608

www.thinkIC2.com

Contact: Stephen Horowitz, PhD
Email: shorowitz@thinkIC2.com
Phone: 256-698-6175

Questions