Distributed Sensor Network with Synchronization via IEEE 1588 Precision Time Protocol

Stephen Pruitt
May 12, 2016

Outline

- DTS background
- Brief overview IEEE 1588 (PTP)
- Problem: High speed DAQ for vehicle blast testing
- Solution: Ultra-miniature PTP design embedded at sensor level
- Flight test applications

©Diversified Technical Systems, Inc. 2016 – All Rights Reserved – Cleared for Public Release

Overview of DTS

- Designer/manufacturer of high sample rate, high shock rated sensors and data recorders.
- Privately owned since 1990, founded by 3 test engineers.
- ~85 Staff members, based in Seal Beach CA

©Diversified Technical Systems, Inc. 2016 – All Rights Reserved – Cleared for Public Release

History in Crash Testing

- Crash Test 1989 – 33 Total Channels: Current Crash Test can be 500+ channels!
- Advanced DAS: Bell & Howell 14 Channel FM Tape Recorder - ~80 lbs

CONFIDENTIAL, NOT TO BE DISTRIBUTED

KEY MARKETS & CUSTOMERS

AEROSPACE & DEFENSE

BAE SYSTEMS
NASA
MBDA
U.S.ARMY
NAWC
U.S. AIR FORCE
AV
FEDERAL AVIATION ADMINISTRATION
LOCKHEED MARTIN
NORTHROP GRUMMAN
Raytheon
BOEING
Sandia National Laboratories
EADS
SPACEX
OTO MELARA
Una Società Finmeccanica
Geven
TRL
GENERAL DYNAMICS
Otokar
SICMA AERO SEAT

AUTOMOTIVE

Applus IDIADA
GM
HONDA
Ford
NISSAN
TOYOTA
CHRYSLER
mazda
Mercedes-Benz
SAAB
DELPHI
KIA
HYUNDAI
SSANGYONG
PMG TECHNOLOGIES
VOLVO
cidaut
TRW
Britax
inga
Autoliv
INSURANCE INSTITUTE FOR HIGHWAY SAFETY
NASCAR
TÜV SÜD
NHTSA www.nhtsa.gov
UTAC
Great Wall
PATAC

RESEARCH

WAYNE STATE UNIVERSITY
UMTRI
MEDICAL COLLEGE OF WISCONSIN
Virginia Tech
APL The Johns Hopkins University APPLIED PHYSICS LABORATORY
Google
The Children's Hospital of Philadelphia
UNIVERSITY of VIRGINIA
CHOC
BYD
ika
The George Washington University
TNO
SPECIALIZED
SRAM
RTA
Visteon
dARI
SHANGHAI YANFENG JOHNSON CONTROLS
MILLBROOK
K2
JIN HENG
HUMANETICS Innovative Solutions
Cranfield UNIVERSITY

©Diversified Technical Systems, Inc. 2016 – All Rights Reserved – Cleared for Public Release

DTS PHILOSOPHY

FAILURE IS NOT AN OPTION

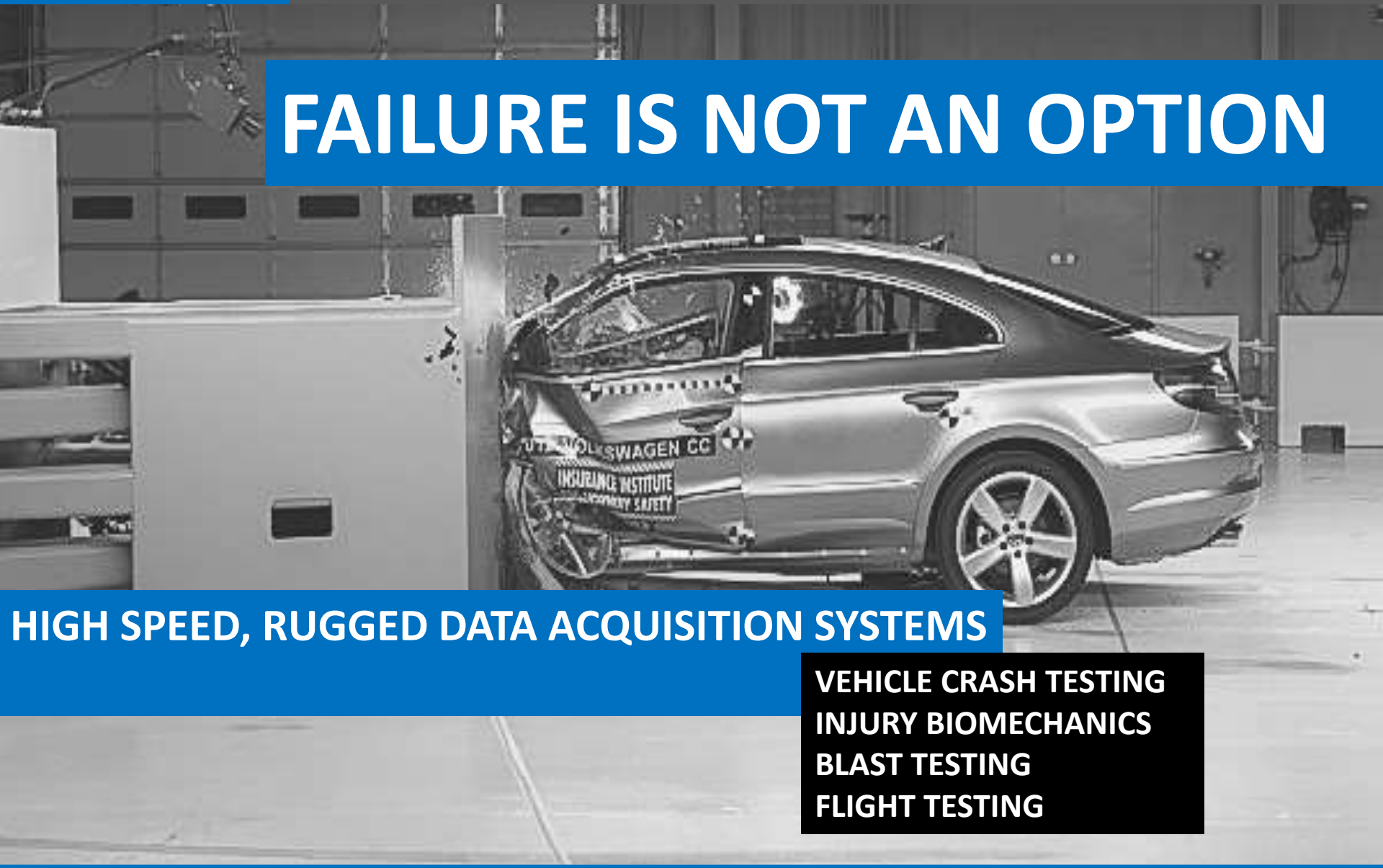

HIGH SPEED, RUGGED DATA ACQUISITION SYSTEMS

VEHICLE CRASH TESTING
INJURY BIOMECHANICS
BLAST TESTING
FLIGHT TESTING

©Diversified Technical Systems, Inc. 2016 – All Rights Reserved – Cleared for Public Release

TYPICAL APPLICATIONS & SHOCK LEVELS

NVH (5k sps)	20 g
VEHICLE SAFETY (20k sps)	100 g
MOTORSPORTS (20k sps)	500 g
RESEARCH, ACOUSTICS (20k to 100k sps)	500 to 5,000 g
BLAST PROTECTION TESTING (100k to 1M sps)	5,000 to 25,000 g
ORDNANCE & BALLISTICS (500k to 1M sps)	Up to 100,000 g

©Diversified Technical Systems, Inc. 2016 – All Rights Reserved – Cleared for Public Release

PRODUCT CATEGORIES

DAS

DATA LOGGERS

SENSORS

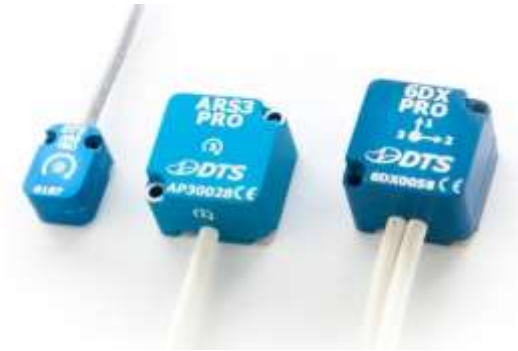

©Diversified Technical Systems, Inc. 2016 – All Rights Reserved – Cleared for Public Release

SLICE NANO PRODUCT LINE

BATT

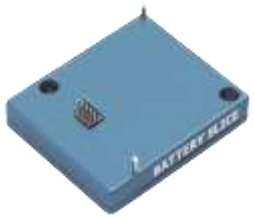

BASE+

BRIDGE

IEPE

UP TO 24ch

- 26 x 31 mm footprint
- Up to 500K sps/channel
- 16 Gbyte flash Memory
- Signal conditioning for accelerometers, pressure sensors, load cells, strain gauges, etc.

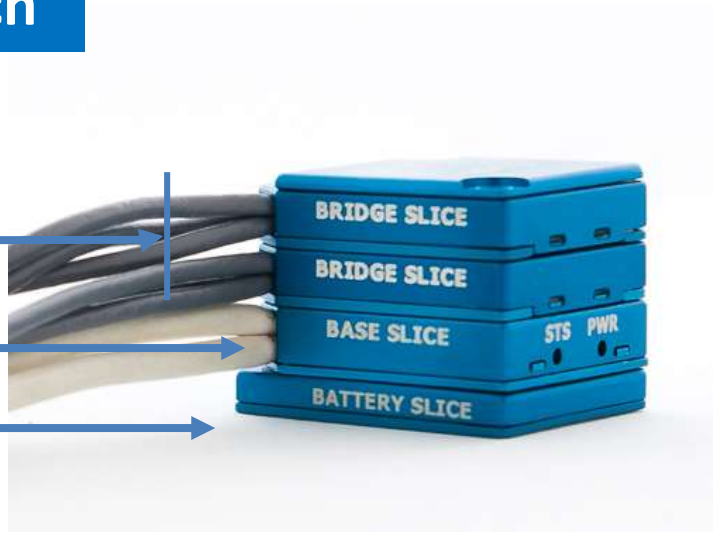

©Diversified Technical Systems, Inc. 2016 – All Rights Reserved – Cleared for Public Release

SLICE NANO PRODUCT LINE

ATD APPLICATIONS – HYBRID III M50 & F5

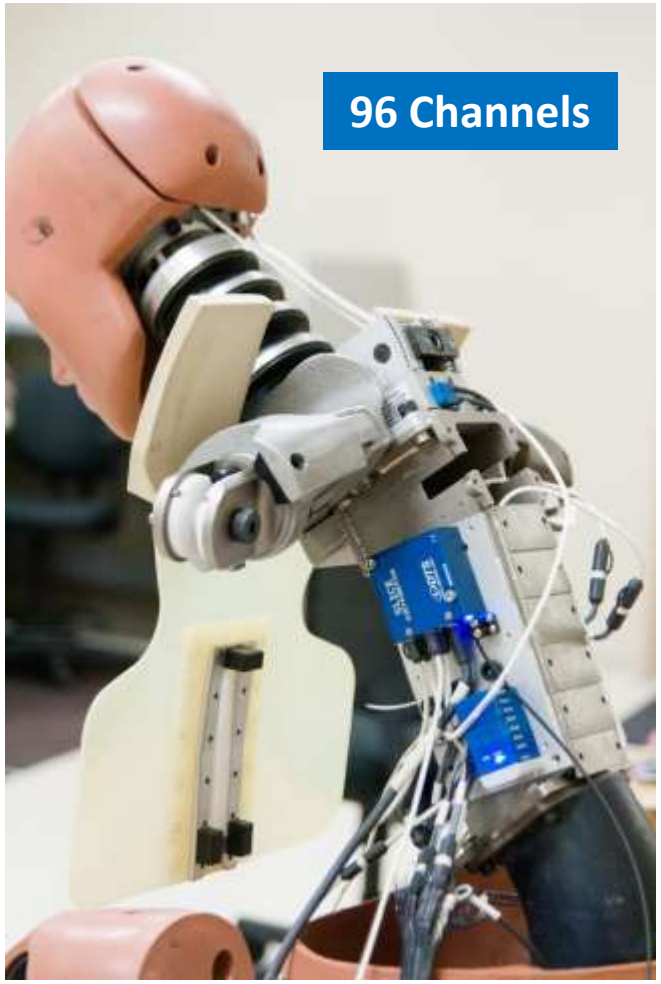

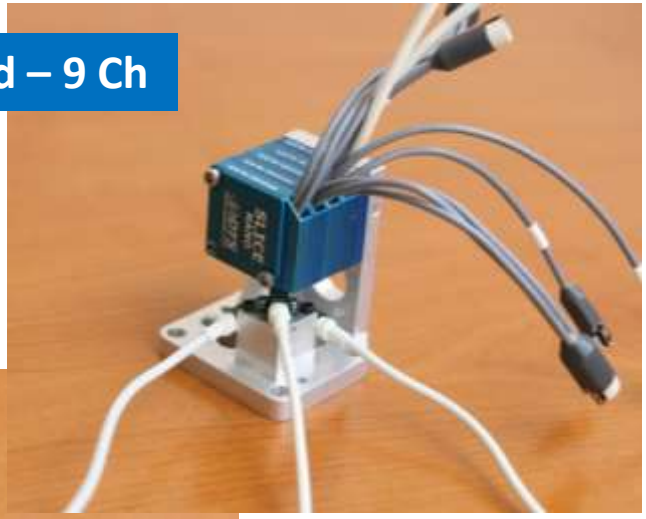

©Diversified Technical Systems, Inc. 2016 – All Rights Reserved – Cleared for Public Release

SLICE HG

25+ kg SHOCK SURVIVABILITY

©Diversified Technical Systems, Inc. 2016 – All Rights Reserved – Cleared for Public Release

SLICE HG APPLICATIONS

PICATINNY ARSENAL – ACCEL/ARS data from 155mm projectile

Approximately 15,000 g's for 14 msec – A lot of Energy!

©Diversified Technical Systems, Inc. 2016 – All Rights Reserved – Cleared for Public Release

SLICE HG APPLICATIONS

CHINA LAKE – Da
3-channel SLICE H

©Diversified Technical Systems, Inc. 2016 – All Rights Reserved – Cleared for Public Release

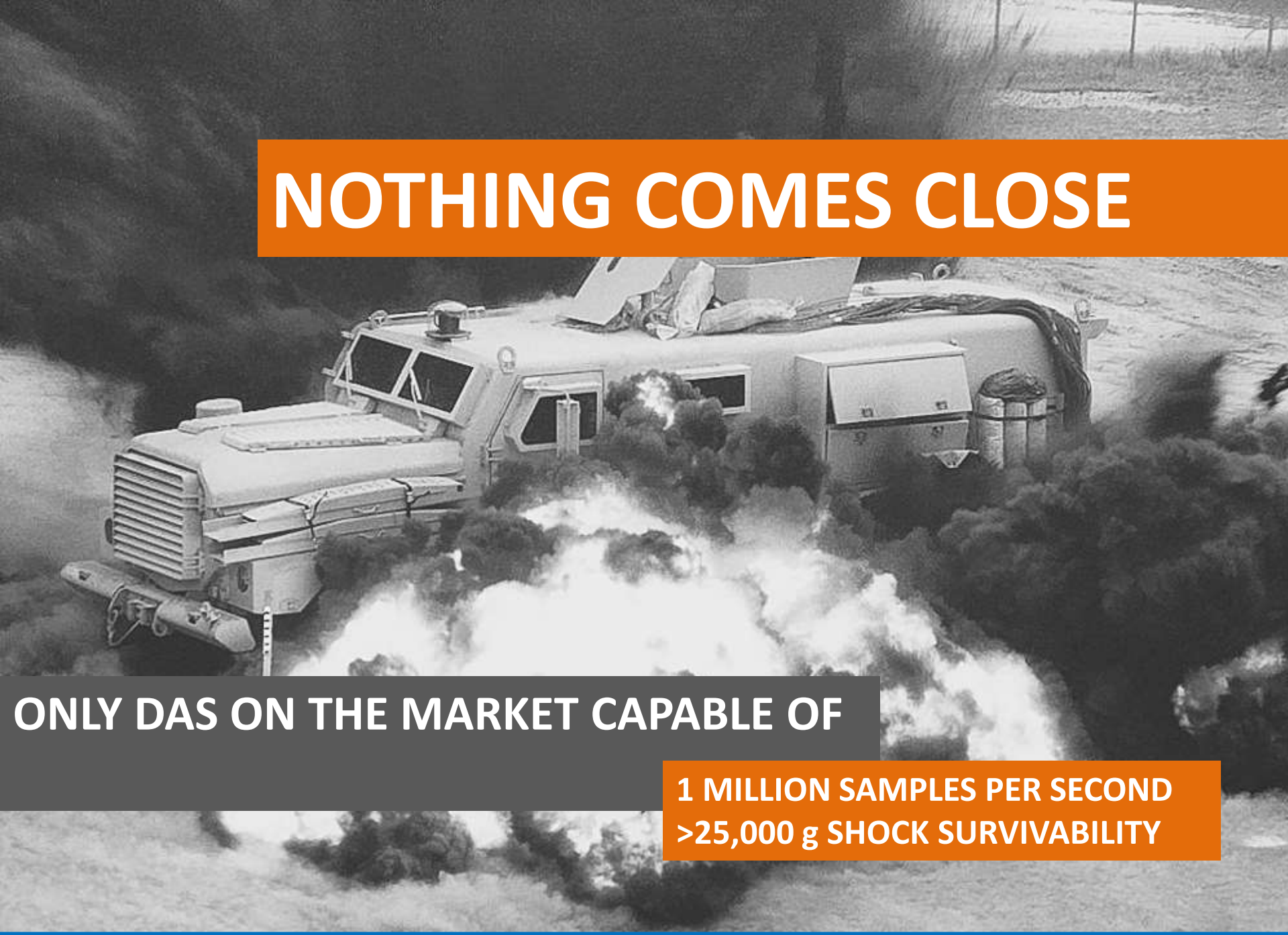

NOTHING COMES CLOSE

ONLY DAS ON THE MARKET CAPABLE OF

1 MILLION SAMPLES PER SECOND
>25,000 g SHOCK SURVIVABILITY

©Diversified Technical Systems, Inc. 2016 – All Rights Reserved – Cleared for Public Release

SLICE MICRO APPLICATIONS

18ch SLICE MICRO
Limited size/weight
Long duration testing

©Diversified Technical Systems, Inc. 2016 – All Rights Reserved – Cleared for Public Release

SLICE MICRO APPLICATIONS

AEROSPACE

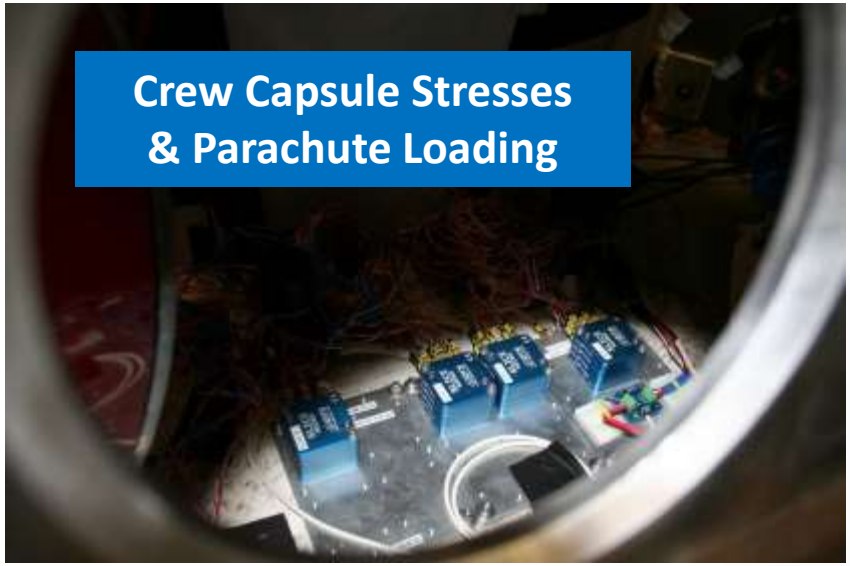

30-Channel Flight Test
2.5 Hours @ 20k sps

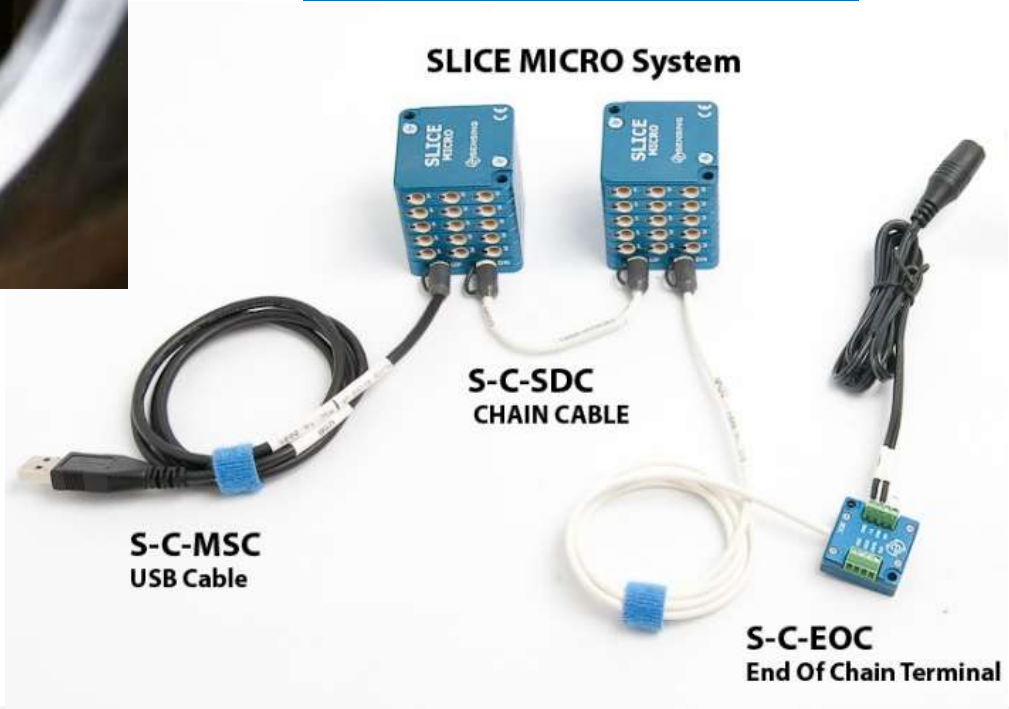

©Diversified Technical Systems, Inc. 2016 – All Rights Reserved – Cleared for Public Release

Brief Overview of IEEE 1588 (PTP)

- IEEE 1588 Version 1 – 2002 (update 2008)
  - Defines a Precision Time Protocol (PTP) designed to synchronize real-time clocks in a distributed system.
- PTP vs NTP (Network Time Protocol) vs IRIG (Inter-Range Instrumentation Group)

	NTP	IRIG	PTP
Description	Relatively easy to implement using existing LAN architecture	Improves time transfer accuracy with dedicated cabling and hardware clocks at both ends	Existing LAN architecture with addition of Master and Slave clocks
Potential Sync Precision	0.5 to 2 msec	1 to 10 µsec	10 to 100 nsec
Cabling	Standard LAN hubs & switches, CAT5	Dedicated, usually coax	Standard LAN hubs & switches, CAT5

©Diversified Technical Systems, Inc. 2016 – All Rights Reserved – Cleared for Public Release

Brief Overview of IEEE 1588 (PTP)

- Why is IEEE 1588 so accurate? Hardware timestamping.

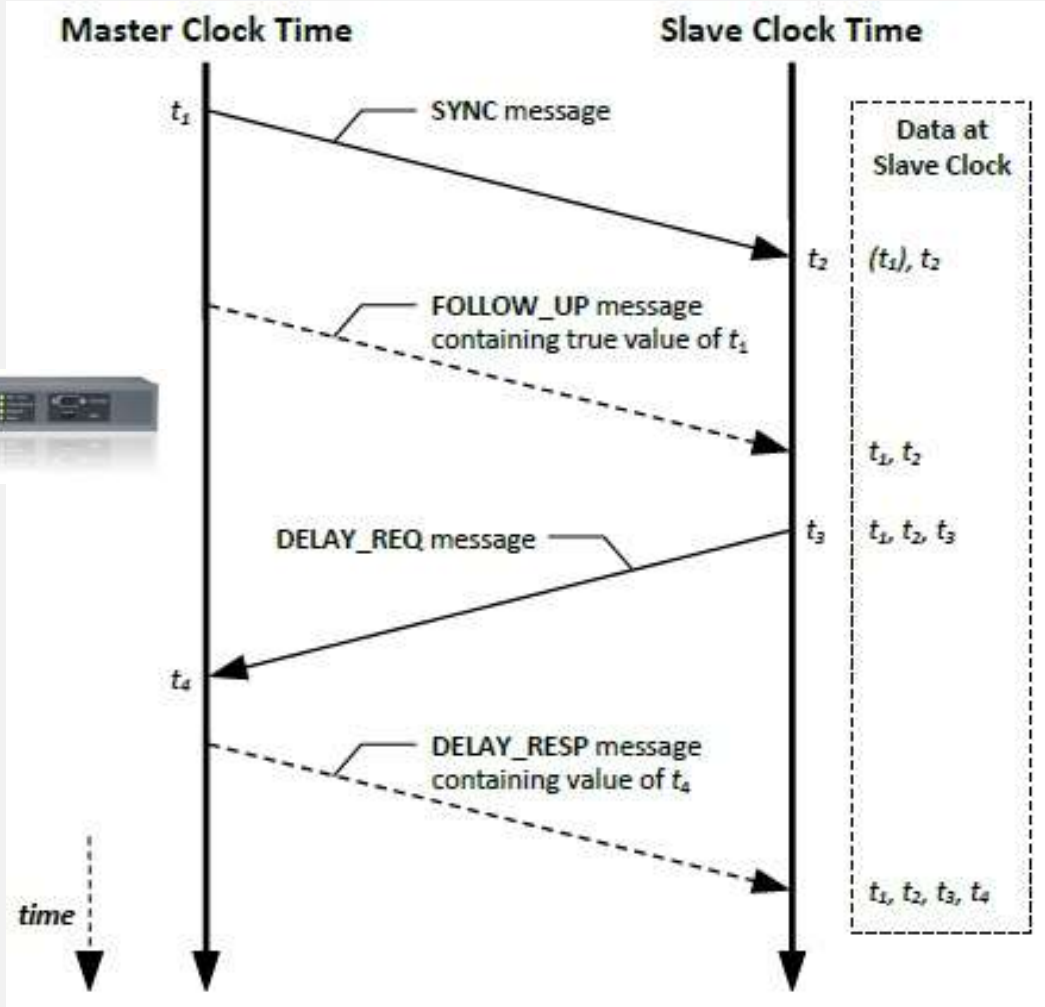

©Diversified Technical Systems, Inc. 2016 – All Rights Reserved – Cleared for Public Release

Brief Overview of IEEE 1588 (PTP)

- A simplified diagram of how this might work is shown below.

Grand Master Clock
(usually synced to GPS)

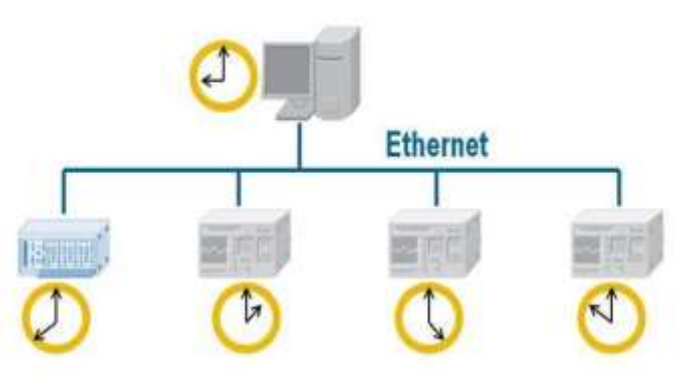

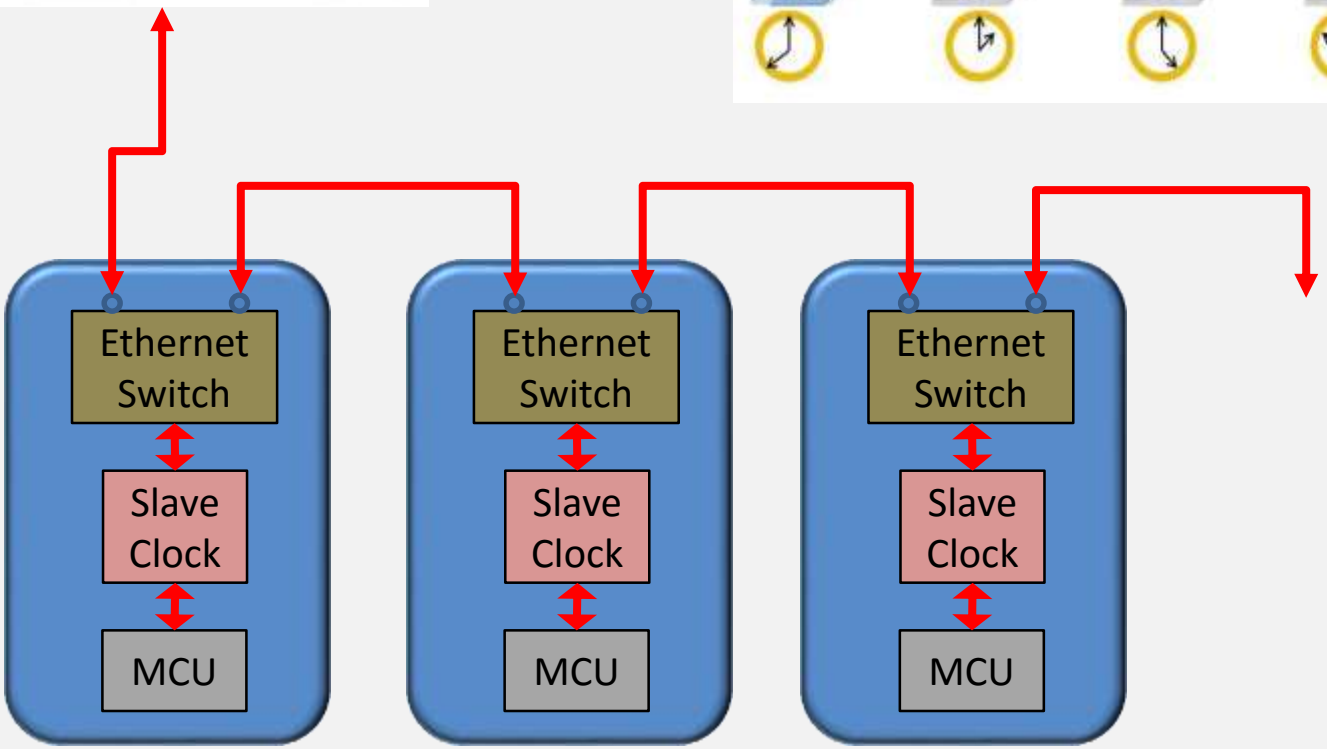

©Diversified Technical Systems, Inc. 2016 – All Rights Reserved – Cleared for Public Release

The Problem

Army WIAMan (Warrior Injury Assessment Manikin)

- DTS is Prime Contractor for development.
- Designed for underbody blast.
- Fully integrated dummy with 200+ channels or in-dummy DAS.
- Up to 12 manikins in a test.
- Also on-vehicle and off-vehicle DAS and high speed cameras.
- Total channels can be > 3,000.
- Requirement to sync all data sampling to within < 5 µsec at sampling rates of 400K to 1M samples/sec/channel.

©Diversified Technical Systems, Inc. 2016 – All Rights Reserved – Cleared for Public Release

Example Exterior Blast Environment

©Diversified Technical Systems, Inc. 2016 – All Rights Reserved – Cleared for Public Release

Example Interior Blast Environment

©Diversified Technical Systems, Inc. 2016 – All Rights Reserved – Cleared for Public Release

System Configuration at Blast Range

Supports up to 12 ATD Umbilical Cables (only one connection shown for clarity)

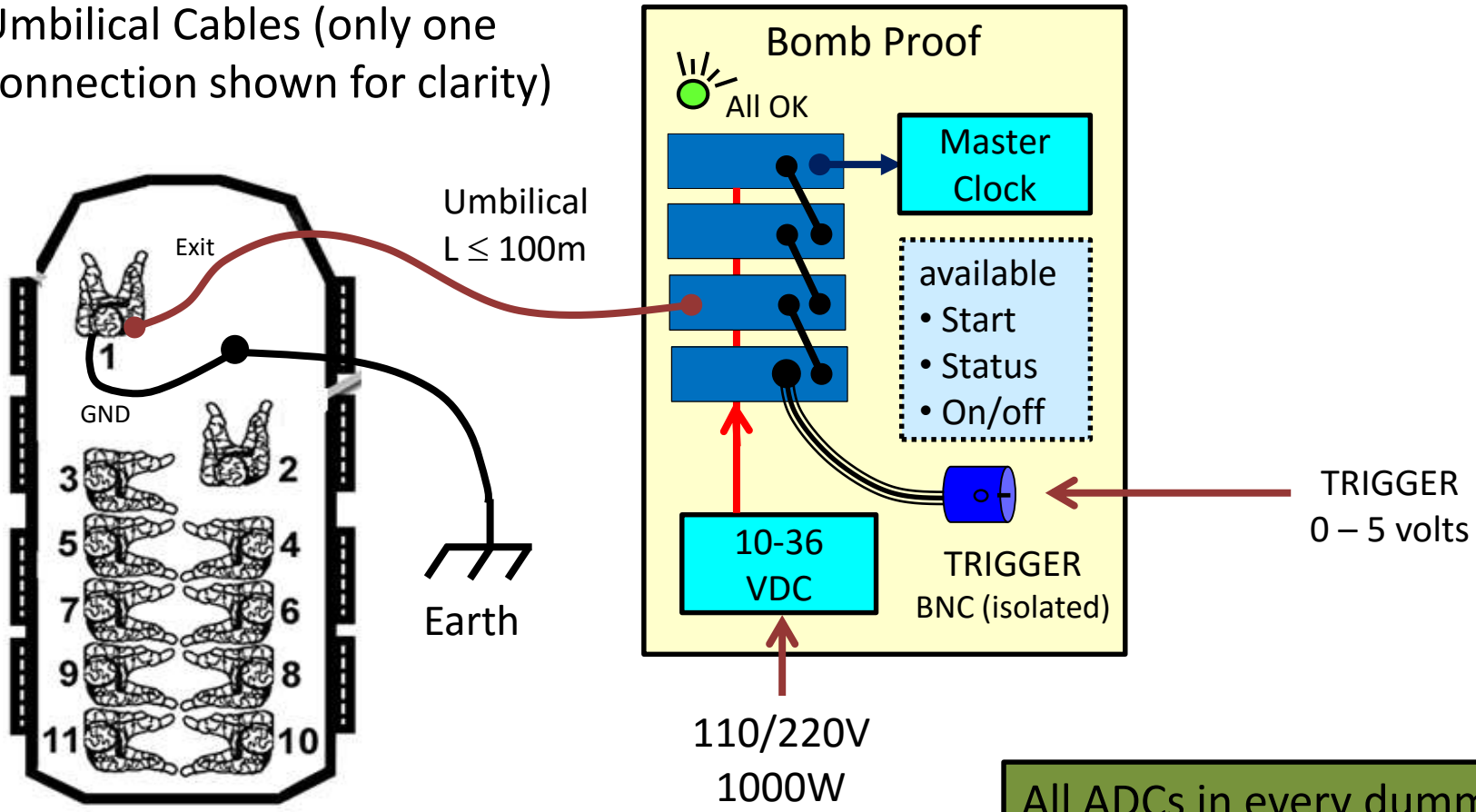

All ADCs in every dummy to be synched (clocked) within < 5 µsec

12 x 200 = 2400 manikin channels

©Diversified Technical Systems, Inc. 2016 – All Rights Reserved – Cleared for Public Release

WIAMan

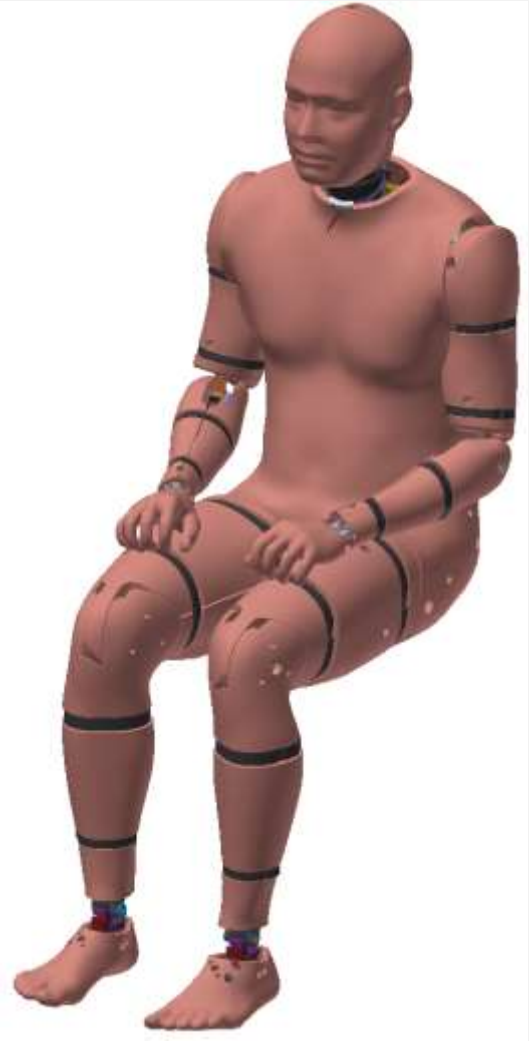

©Diversified Technical Systems, Inc. 2016 – All Rights Reserved – Cleared for Public Release

WIAMan with Embedded DAS

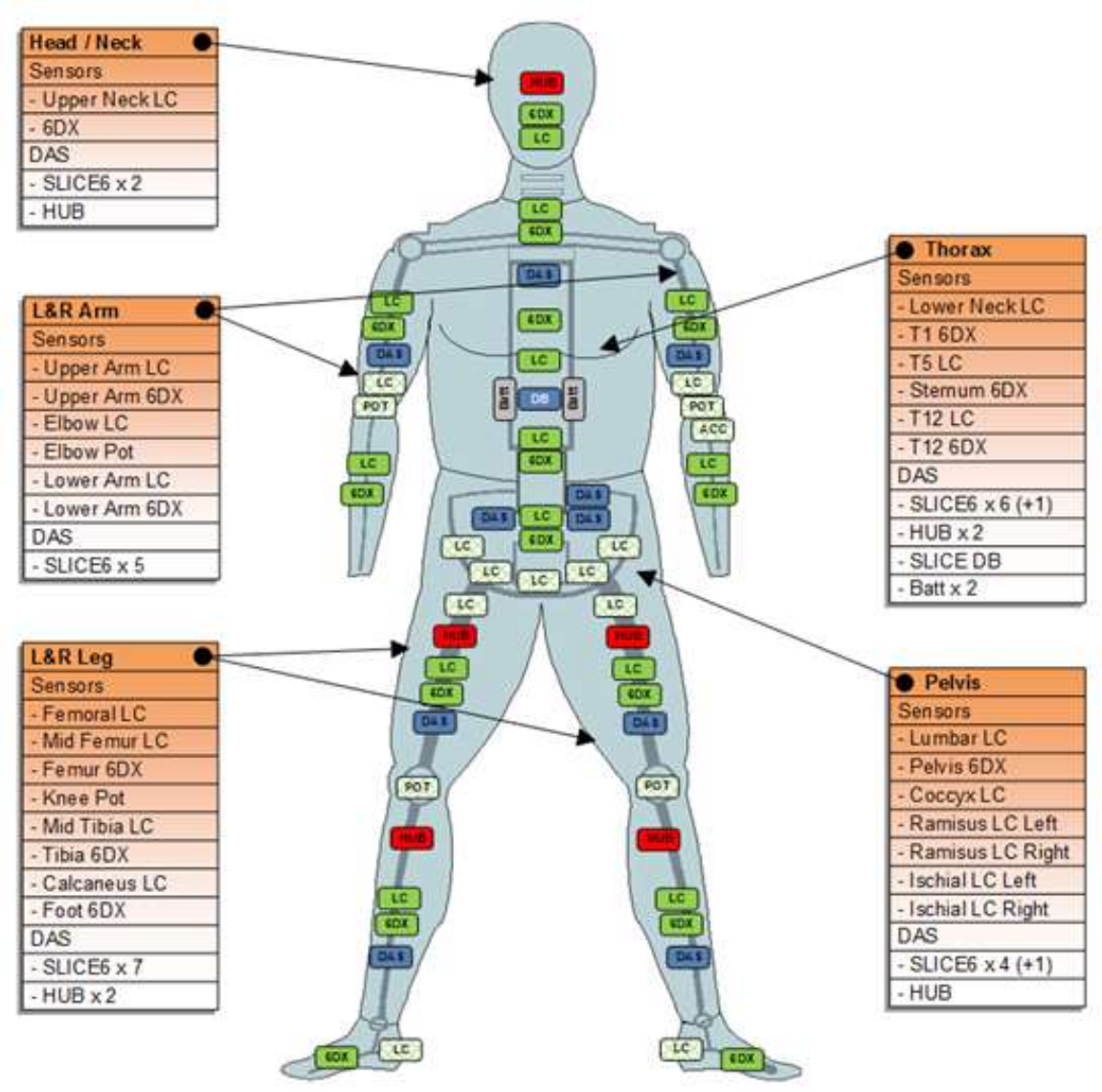

- ~200 Channels
- 6 channel load cells
- 6 Degree-of-Freedom sensors
- All channels networked via Ethernet
- One exit umbilical for manikin

©Diversified Technical Systems, Inc. 2016 – All Rights Reserved – Cleared for Public Release

The Solution?

200 channels using National Instruments PXI with IEEE 1588

Need to fit all this inside the manikin (plus batteries)

©Diversified Technical Systems, Inc. 2016 – All Rights Reserved – Cleared for Public Release

A New Solution

- 6 channel DAS (24 x 30 x 10 mm) plugs on to each sensor.
- All data digitized at the sensor, synchronized using miniaturized IEEE 1588 hardware built in to each 6 channel DAS.
- Data stored to local 16 GB flash memory and DAS/sensors chained via Ethernet to create a large, distributed sensor network.

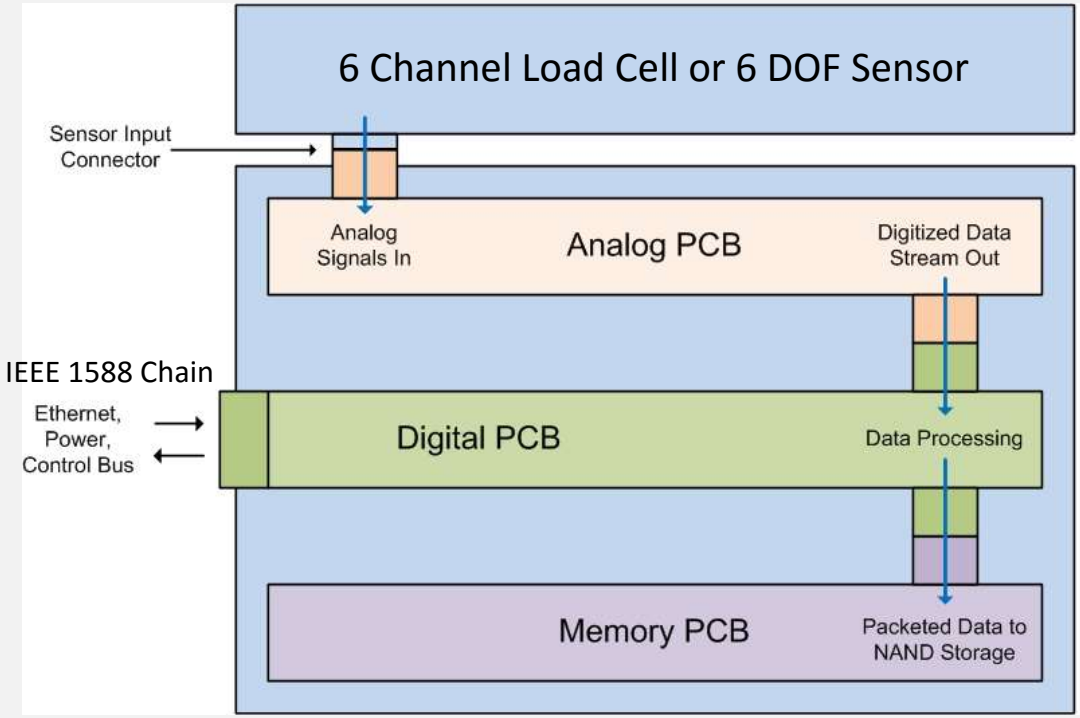

24 x 30 x 10 mm

6 Channel DAS

- Excitation for sensors
- Prog. gain, offset, AA filters
- 400 Ksps/chan, 16 bit ADC
- 16 GB flash Memory

©Diversified Technical Systems, Inc. 2016 – All Rights Reserved – Cleared for Public Release

SLICE6 IEEE Synchronized Clock

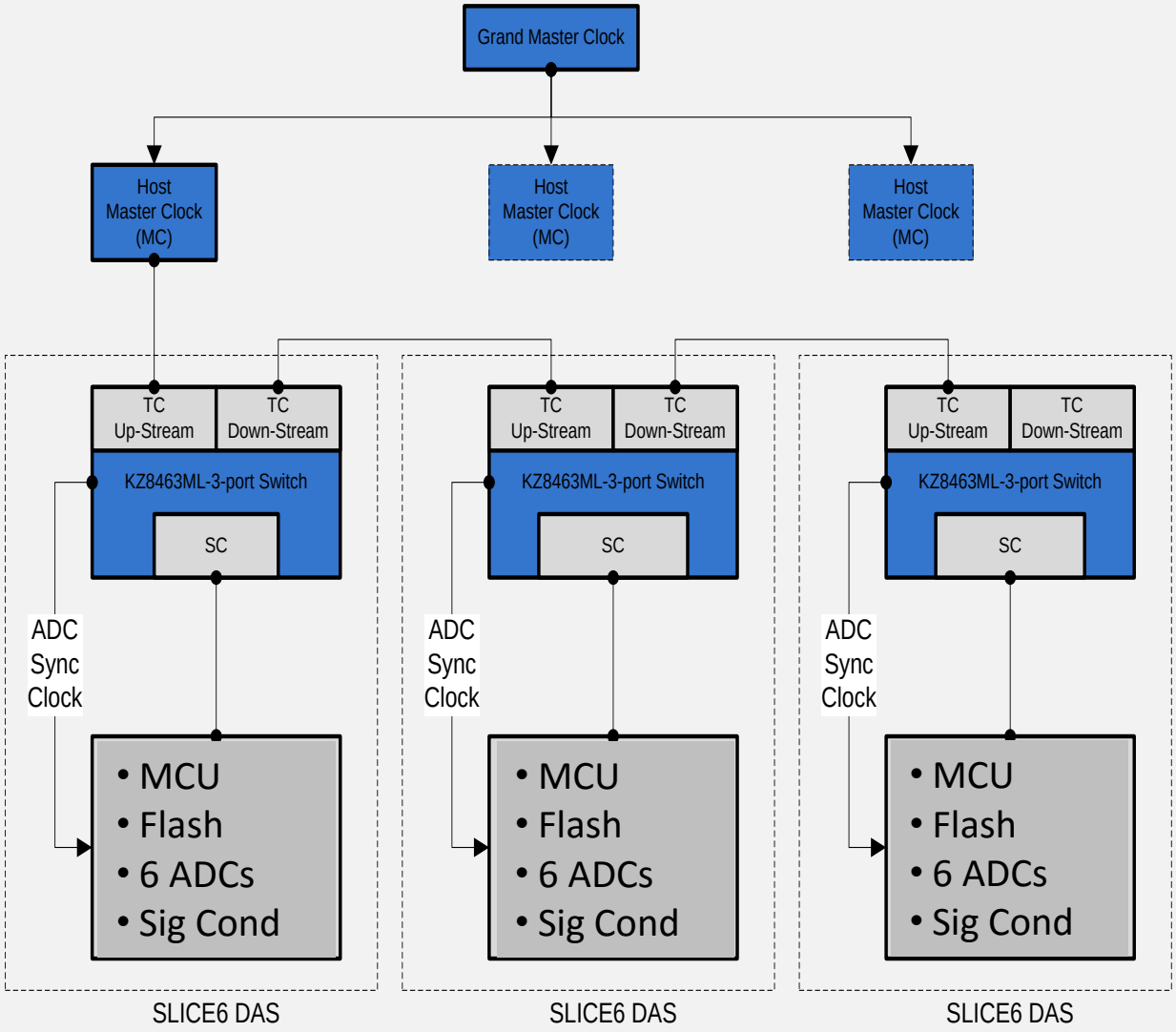

- Master Clock (MC): Provide reference clock to synchronize all slave devices on network.
- 3-Port Ethernet Switch.
  - Port 1: Upstream to MC
  - Port 2: SLICE6 MCU
  - Port 3: Downstream
- Transparent Clock (TC): Synchronize with MC & reference clock ADC.
- Slave Clock (SC): Synchronize with MC via PTP stack.
- If MC lost, internal oscillator takes over clocking ADC until MC returns.

©Diversified Technical Systems, Inc. 2016 – All Rights Reserved – Cleared for Public Release

SLICE6 – Signal Conditioning

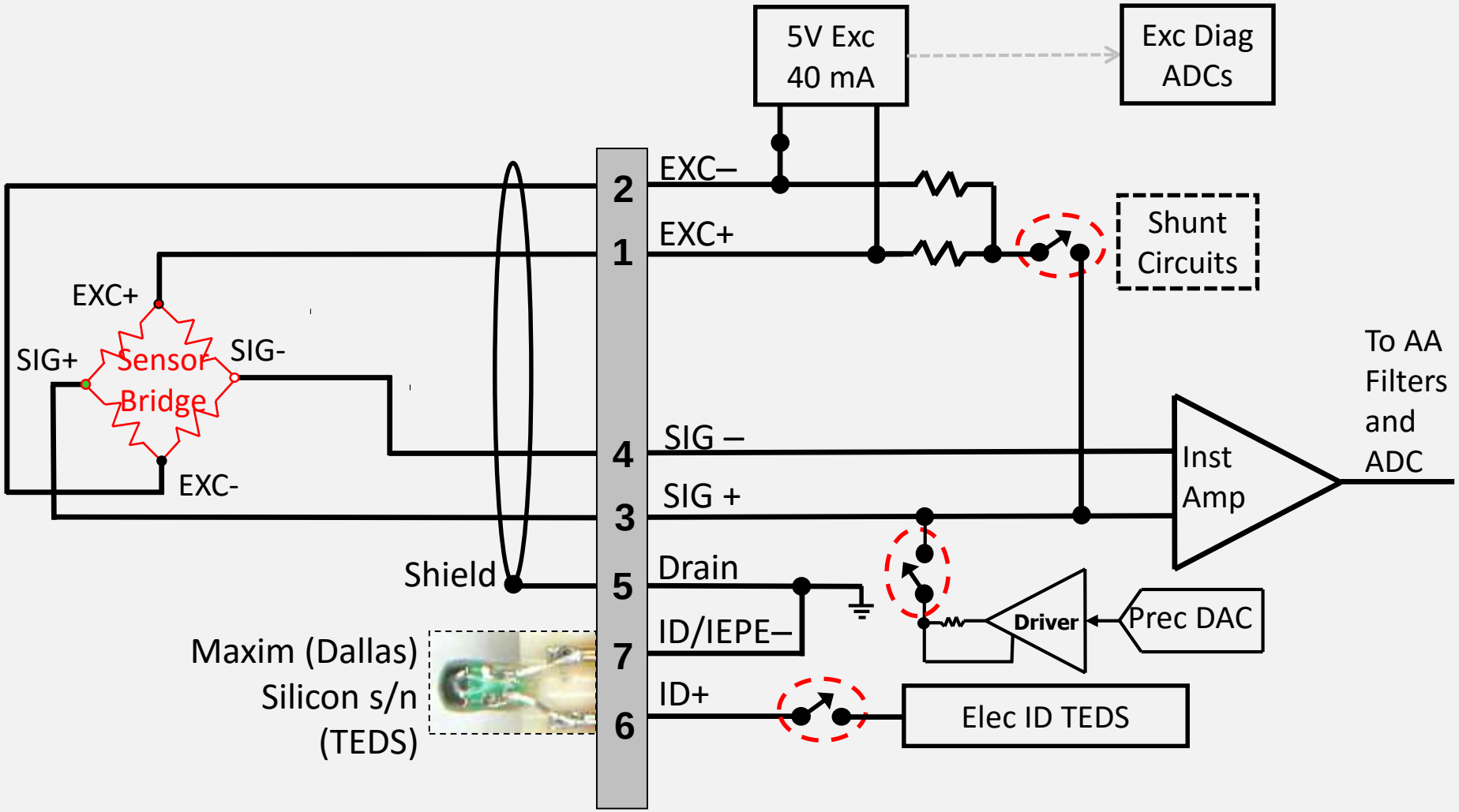

Sensor Side ← ⋮ → Internal to SLIC6 (x6 channels)

©Diversified Technical Systems, Inc. 2016 – All Rights Reserved – Cleared for Public Release

SLICE6 Specs

- 6 differential input channels - can plug directly on to sensor or used with sensor harness
- Sig. Cond. for accels, pressure sensors, load cells, strain gauges, etc.
- Size: 24 x 30 x 10 mm
- 16 bit, 400 Ksps/chan ADC (one per chan) - FPGA for managing ADC
- 16 GB flash memory
- 3 port Ethernet switch – Clocks and FW for IEEE 1588 PTP
- Shock rated to 5,000 g – Rated from -40 to +85 C

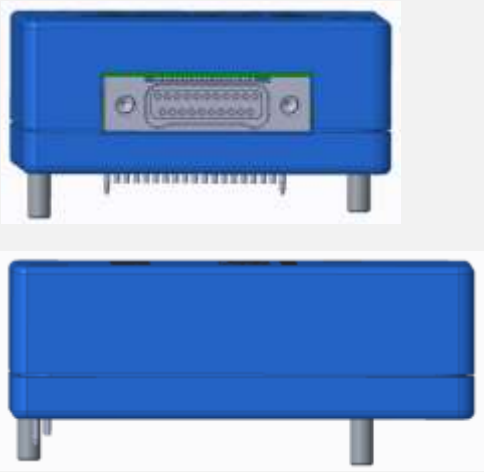

©Diversified Technical Systems, Inc. 2016 – All Rights Reserved – Cleared for Public Release

WIAMan with Embedded DAS

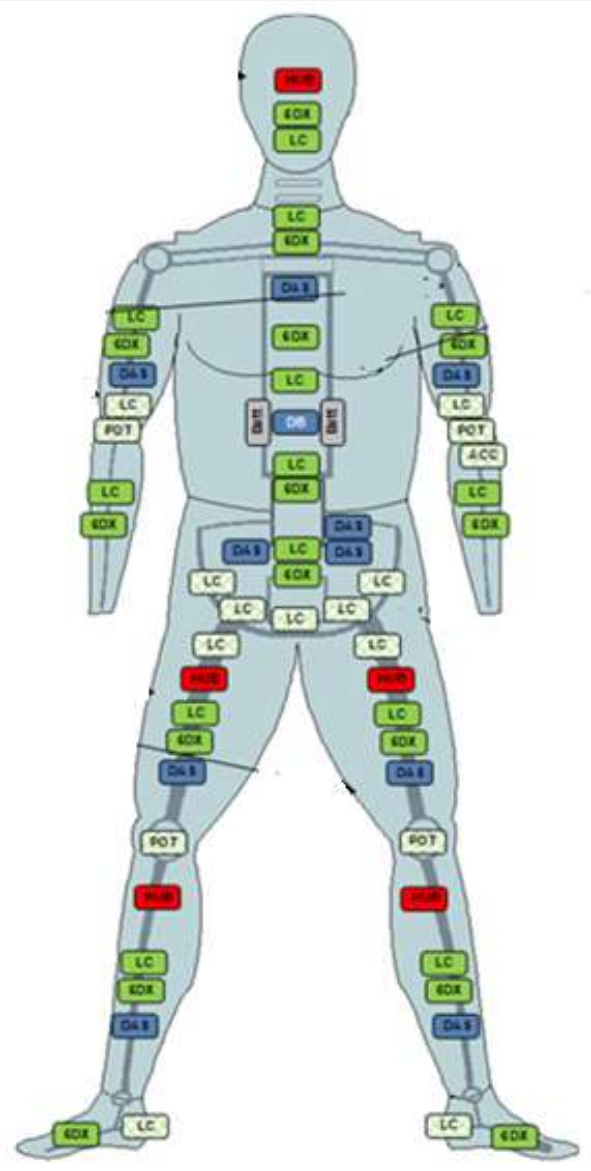

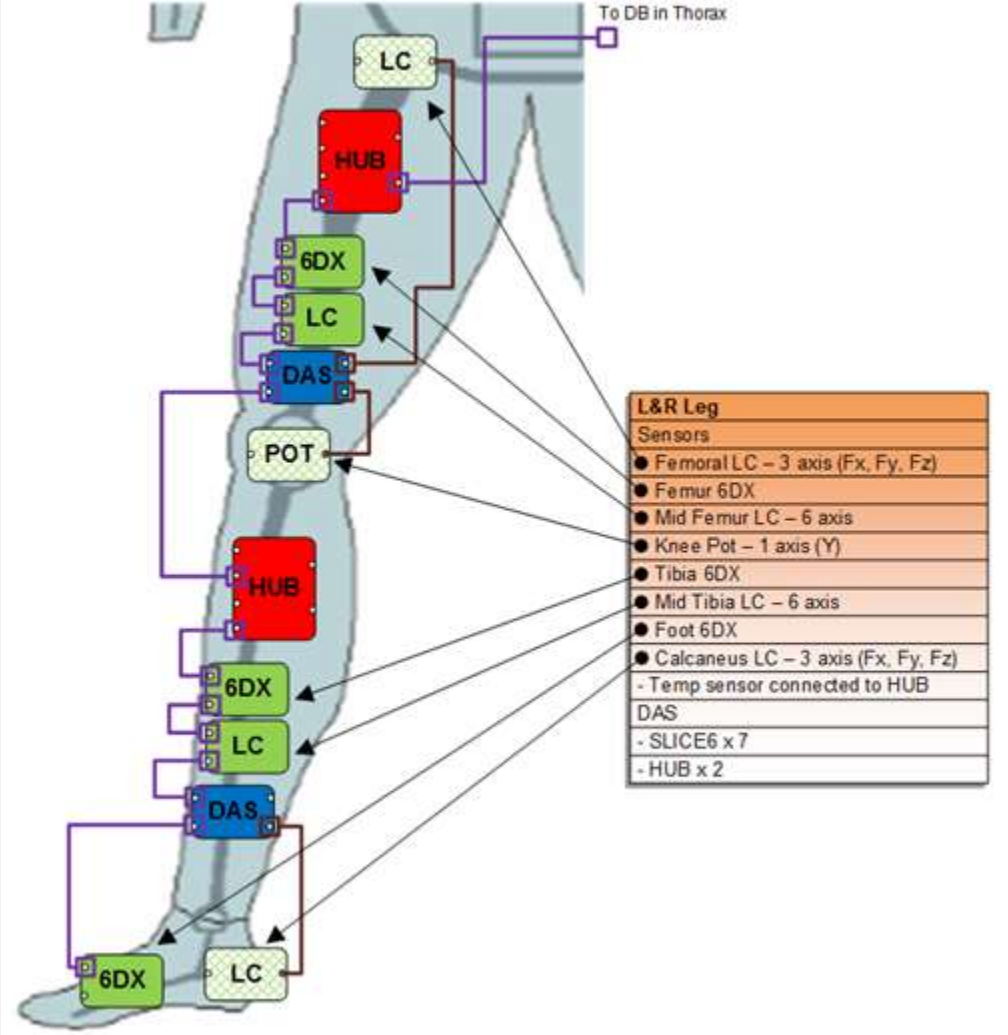

©Diversified Technical Systems, Inc. 2016 – All Rights Reserved – Cleared for Public Release

IEEE 1588 for Flight Test?

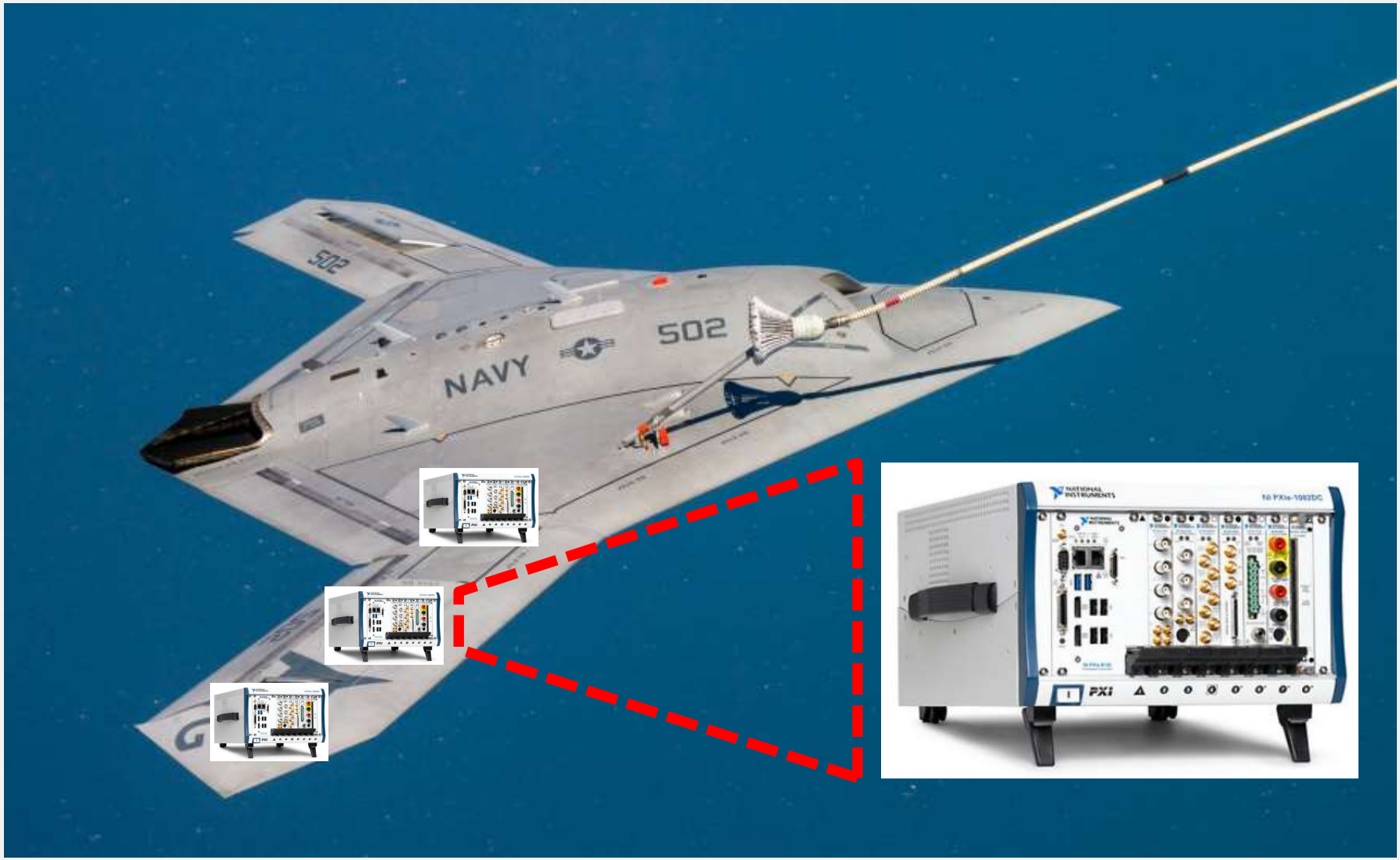

©Diversified Technical Systems, Inc. 2016 – All Rights Reserved – Cleared for Public Release

IEEE 1588 for Flight Test

Sensors with embedded, chainable IEEE 1588 PTP

Eth to PCM to Telemetry

Talking with one customer about making SLICE6 lower profile, maybe < 5mm thick

©Diversified Technical Systems, Inc. 2016 – All Rights Reserved – Cleared for Public Release

Integrated into Existing Flight Test

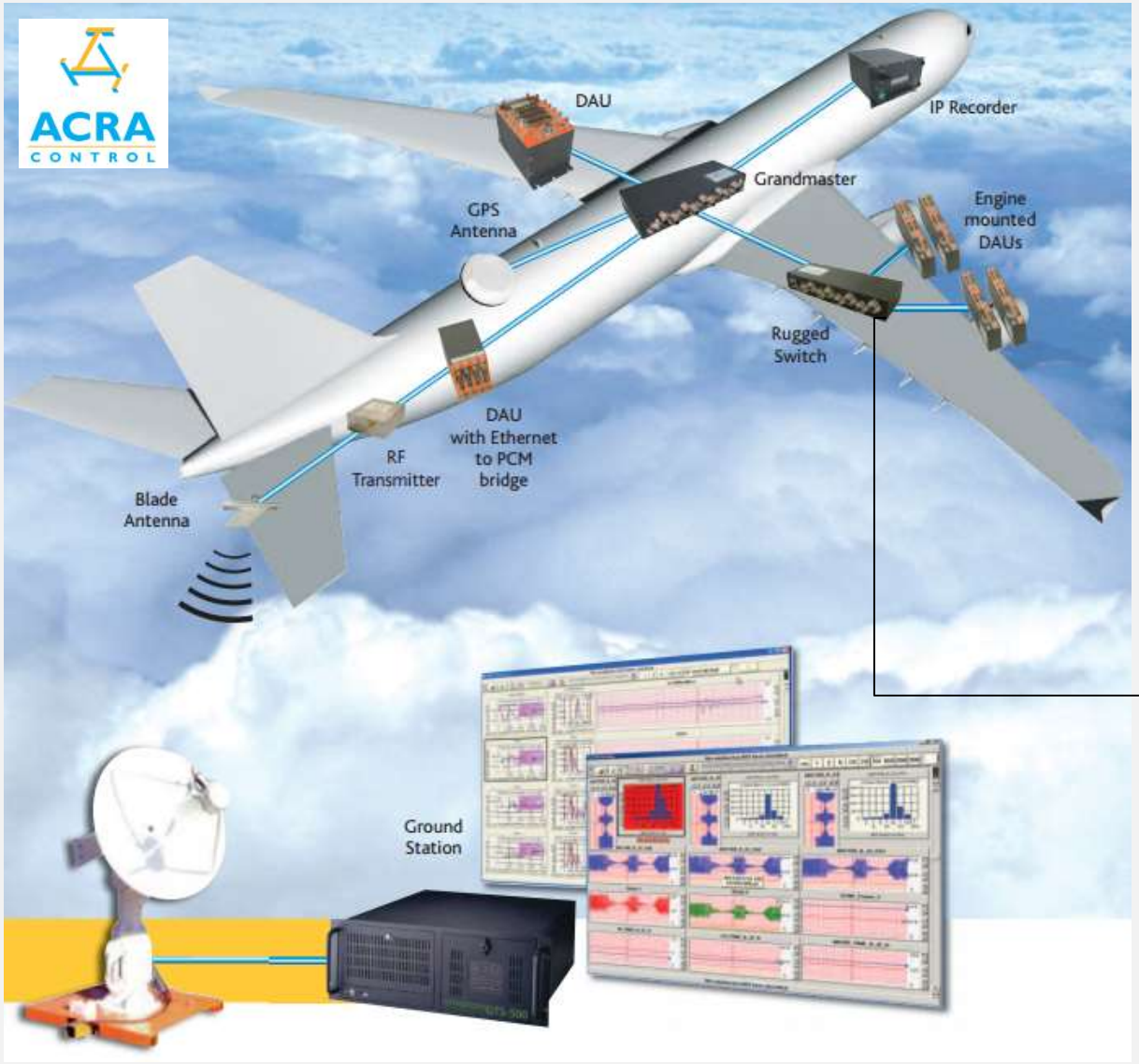

Sensors with embedded PTP can be linked into existing flight test systems

©Diversified Technical Systems, Inc. 2016 – All Rights Reserved – Cleared for Public Release

QUESTIONS?

©Diversified Technical Systems, Inc. 2016 – All Rights Reserved – Cleared for Public Release

THANK YOU

©Diversified Technical Systems, Inc. 2016 – All Rights Reserved – Cleared for Public Release