System Management Usage in Test Article Networks

May 2017

Telemetry & RF Products

Agenda

- **Background**
  - **Removal of Proprietary formats and communications mechanisms**
  - **Adoption of iNET/RCC Standards**
- **RCC**
  - **Chapter Overview**
- **Hardware**
  - **Timing and Synchronization**
  - **TmNS Packets**
  - **Data Processing**
- **Software**
  - **System Management Interfaces**
  - **Integration with customer hardware**
  - **Status**
  - **Quality of Service**

Background

- **Over the last few years the telemetry industry is moving from PCM to Network based telemetry systems**
- **To meet market demand companies are increasing their network product portfolio and to satisfy the user base network based solutions must ensure:**
  - **No loss of functionality from PCM systems**
  - **Network should increase the capability of the telemetry system**

What can be lost from PCM

- PCM Systems have deterministic latency between DAU's
- PCM Systems are configured through software that has visibility of the complete hierarchy
- Switches, Grandmasters and gateways may increase the number of devices

Potential Gains of Network Telemetry

- DAU's can have independent sampling schedules to reduce over-sampling
- Data can be processed and cherry picked to produce a simple stream:
  - Low performance devices such as pilot control units
  - Save bandwidth for PCM downlink
- Command and Control techniques allow a system to change it's configuration
  - Reduce Data – Transmit as needed
  - Support multiple test configurations without landing
- Configuration software can program devices in parallel to reduce configuration time

Removal of Proprietary Formats

- **As the complexity of network telemetry increases, vendors must meet the demands with more flexible systems and designs**
- **Existing systems have traditionally relied upon proprietary formats**
- **Communication Protocol**
  - **Broadcast Status**
  - **Configuration**
- **Data Formats**
  - **Configuration Files**
  - **Status Data**
  - **Packet Format of Telemetry Data**

Simplified Block Diagram

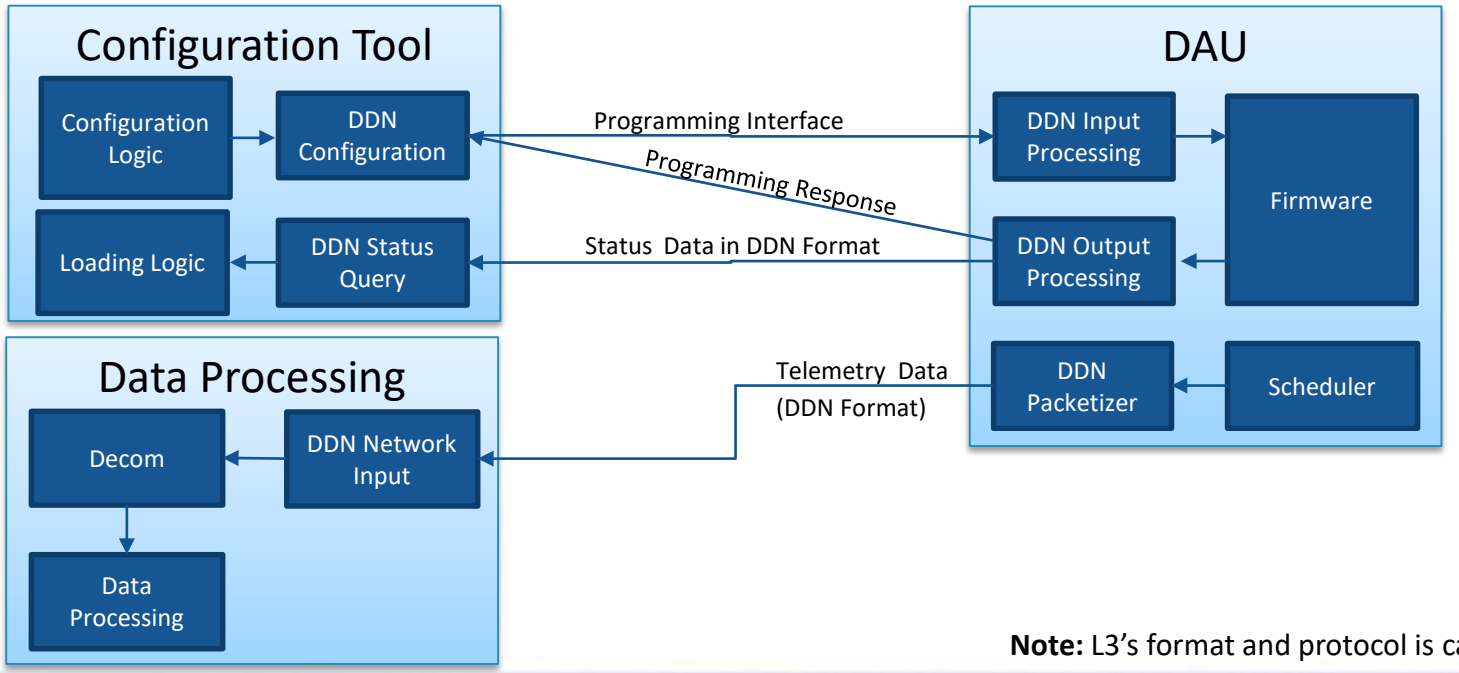

Note: L3's format and protocol is called DDN

Removal of Proprietary Formats

- **To meet customer demand proprietary interfaces and formats have been replaced with open standards**
  - **DDN interfaces have been removed**
  - **DDN data formats are no longer used**
- **Configuration technique was abandoned to comply with the iNET methodology**

Simplified Block Diagram

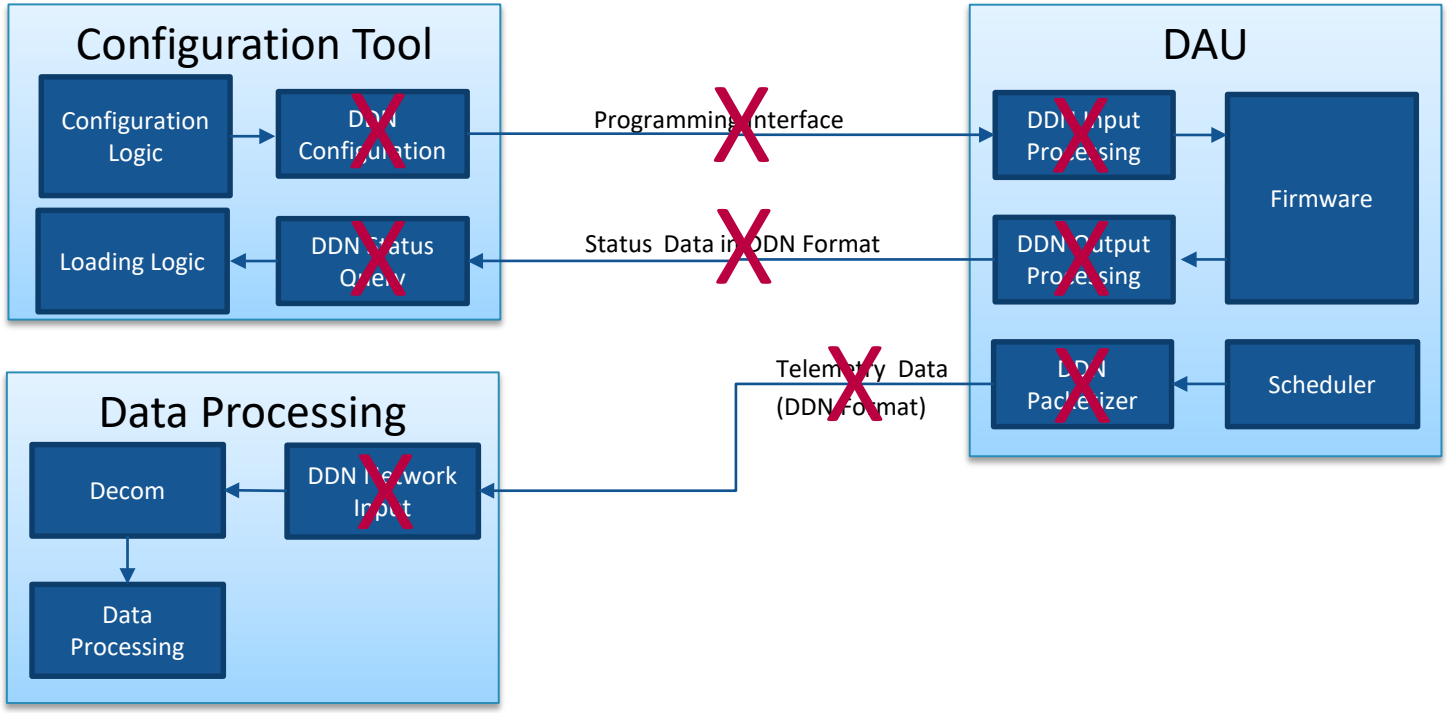

Removal of Proprietary Formats

- **The new RCC standards for data formats and interfaces have been adopted**
- **Communication Protocol**
  - **iNET Configuration Protocol**
  - **SNMP for status and management**
- **Data Formats**
  - **Configuration Files are still proprietary**
  - **Status SNMP or Telemetry Measurements**
  - **TmNS format for Telemetry data**

System Management tool was developed to discover and monitor **iNET compliant devices** on a telemetry network

Simplified Block Diagram

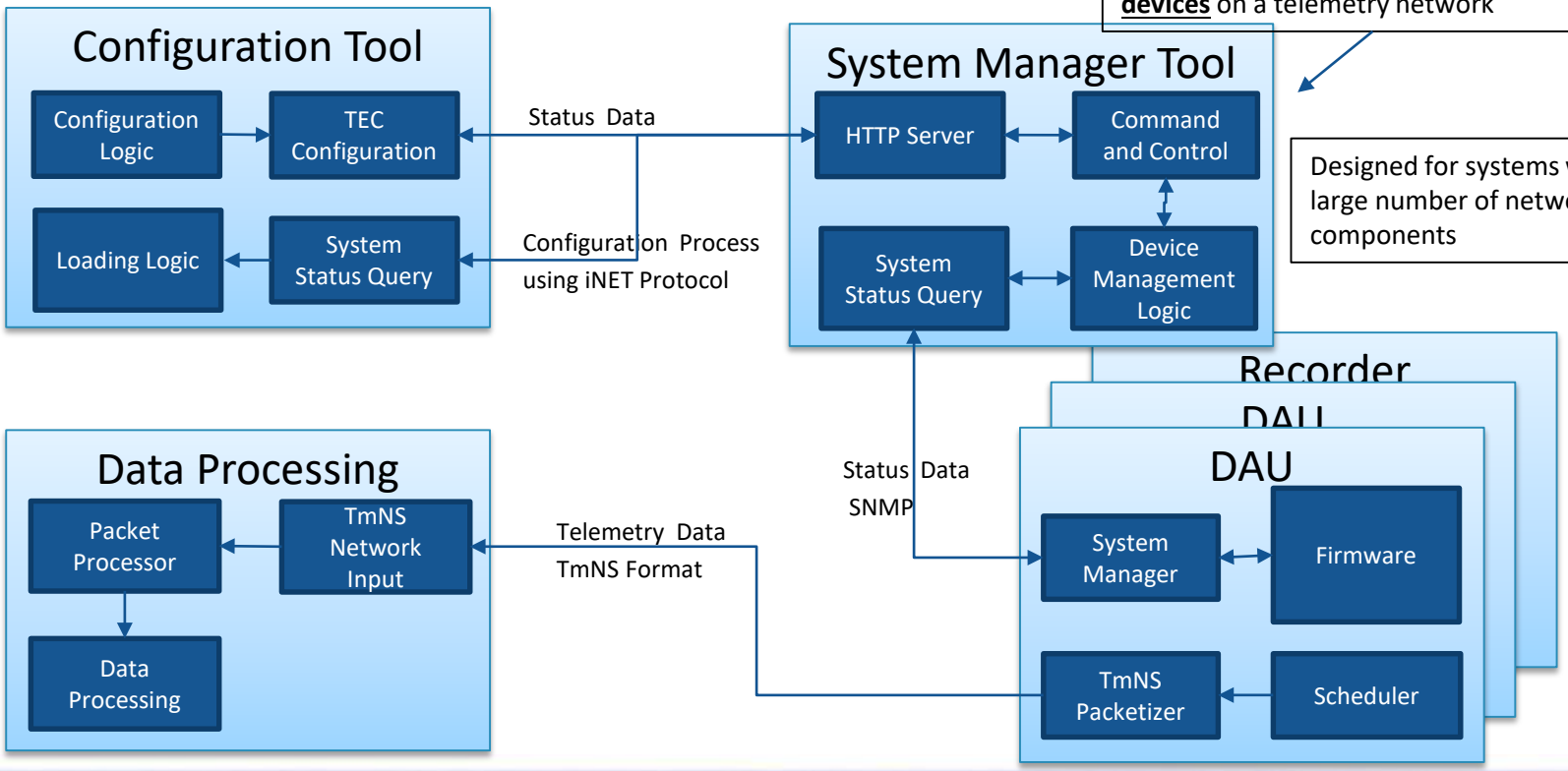

Designed for systems with large number of network components

RCC and iNET Standards

- **The previous set of slides is a high level overview of the changes that were implemented to create an interoperable network telemetry system**
- **The next set of slides discuss how the standards are integrated**

Traditional PCM to Interoperable Network

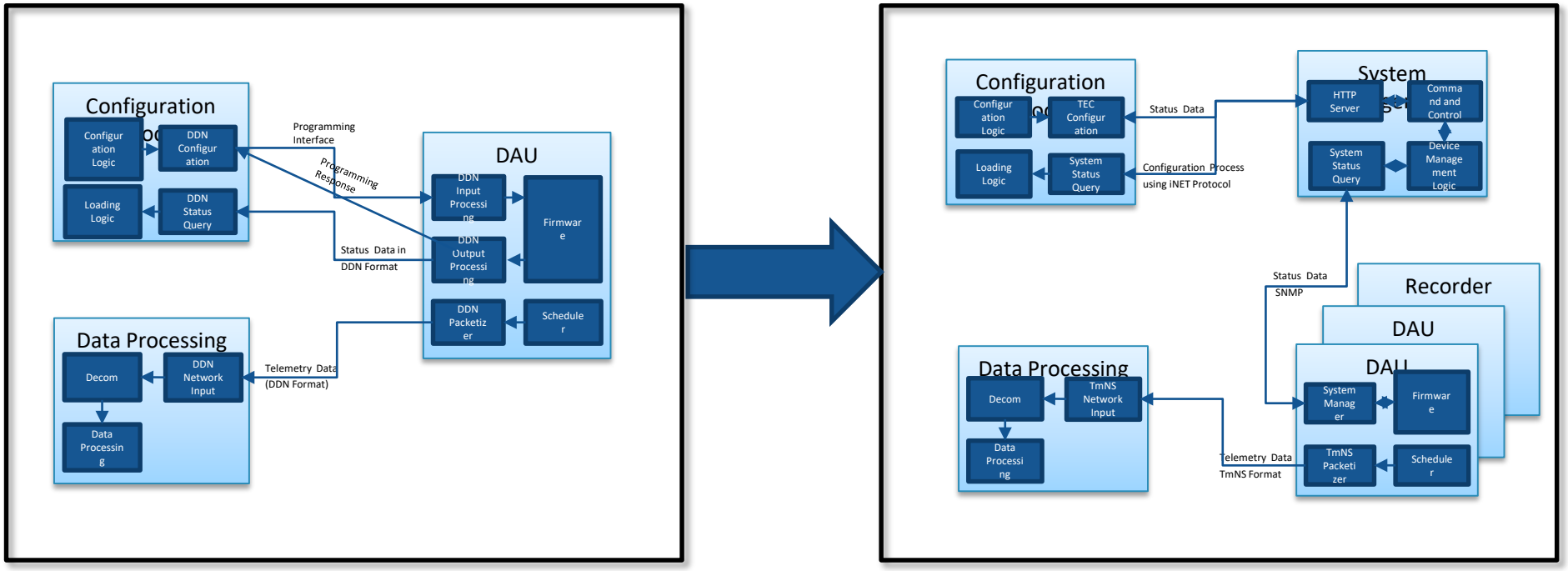

RCC Chapters

The RCC Chapters 21-28 define the standards for an open interoperable network telemetry system
The diagram below outlines what is contained in the chapters
Items in green discuss the standards that will be covered in this presentation

Chapter 21 Introduction	Chapter 22 Network Based Protocol Suite	Chapter 23 Configuration MDL	Chapter 24 Message Formats	Chapter 25 Management Resources	Chapter 26 TmNS Data Message Xfer Protocol	Chapter 27 RF Network Access Layer	Chapter 28 RF Network Management
TmNS System Concepts	Network Access Physical Layer	Schema	TmNS Message	Public RFC Management Resources (SNMP)	Data Channel Characteristics	Radio Network Access Concepts and Definitions	RF Network Management Concepts and Definitions
TmNS Core Technologies	Network Access Data Link Layers	Measurements	RF Network Message	TmNS Specific Management Resources (SNMP)	Metadata – Defined Application Data Transfer	Physical Layer	RF Media Access Control Layer
TmNS Definitions	Internet Layers (IPv4, IPv6, Transmission, Multicast, Routing)	Bus Configuration	TSS Messages	Management Resource Matrix	Request Defined Application Data Transfer	RF Burst Format	Logical Link Control Layer
Relationship between standards and specs	Transport Layer Protocols	Devices		Management Protocols (SNMP, TmNS, HTTP)	TmNS Message Transfer Rules	RF Media Access Control Frame Structure	Tunnel Management
	Application Layer Protocols	Network Node		Uniform Resource Name URN		Power Transients	
	TmNS App Protocols (SNMP, HTTP, RTSP, VOIP, File Transfer, …)						
	Quality of Service						

Time and Synchronization

The RCC Chapters 21-28 define the standards for an open interoperable network telemetry system

Chapter 21 Introduction	Chapter 22 Network Based Protocol Suite	Chapter 23 Configuration MDL	Chapter 24 Message Formats	Chapter 25 Management Resources	Chapter 26 TmNS Data Message Xfer Protocol	Chapter 27 RF Network Access Layer	Chapter 28 RF Network Management
TmNS System Concepts	Network Access Physical Layer	Schema	TmNS Message	Public RFC Management Resources (SNMP)	Data Channel Characteristics	Radio Network Access Concepts and Definitions	RF Network Management Concepts and Definitions
TmNS Core Technologies	Network Access Data Link Layers	Measurements	RF Network Message	TmNS Specific Management Resources (SNMP)	Metadata – Defined Application Data Transfer	Physical Layer	RF Media Access Control Layer
TmNS Definitions	Internet Layers (IPv4, IPv6, Transmission, Multicast, Routing)	Bus Configuration	TSS Messages	Management Resource Matrix	Request Defined Application Data Transfer	RF Burst Format	Logical Link Control Layer
Relationship between standards and specs	Transport Layer Protocols	Devices		Management Protocols (SNMP, TmNS, HTTP)	TmNS Message Transfer Rules	RF Media Access Control Frame Structure	Tunnel Management
	Application Layer Protocols	Network Node		Uniform Resource Name URN		Power Transients	
	TmNS App Protocols (SNMP, HTTP, RTSP, VOIP, File Transfer, …)						
	Quality of Service						

Timing and Synchronization

- **The importance of timing in telemetry can not be understated**
- **Multi DAU networks must have the capability to:**
  - **Synchronize time between the devices**
  - **Synchronize sampling between devices like traditional master/remote PCM systems**
- **The System Management standard calls out the usage of IEEE-1588 Standard for time synchronization**
  - **Off the shelf integrated hardware components to reduce R&D costs -> Customer Cost**
  - **Rely on third party components (switches, grandmaster, etc) to reduce R&D costs**
  - **Integration with customer hardware is simplified because of open standards**
  - **Well defined open standards reduce risk for both vendors and customers**

What can be lost from PCM

- PCM Systems have deterministic latency between DAU's
- PCM Systems are configured through software that has visibility of the complete hierarchy
- Switches, Grandmasters and gateways may increase the number of devices

Timing and Synchronization

- **Customer Challenge**
  - **To reduce physical maintenance costs a customer wanted networks separated by wireless communications**
  - **The devices needed to be synchronized**
  - **Needed simultaneous sampling across DAU's**
    - ***Channels on different DAU's must be synchronized with one another***
- **IEEE-1588 made implementing the solution rather simple**
- **These requirements would be difficult to achieve with a traditional PCM system**

IEEE-1588 Based System Synchronization

- **Customer wanted to use wireless connections which can interfere with IEEE-1588 synchronization**
- **Solution was to use separate timing systems**
  - **Separate GPS Time Code Processors independently synchronize separate sub-nets**
  - **GPS Time code processor in the sub-net area synchronizes the remote DAUs**
  - **A second GPS Time code processor synchronizes the wired DAUs, data aggregators and PCM generators**
  - **No loss of timing fidelity**
- **Using separate time code processors met customer synchronization requirements**
  - **Verified using 1PPS signals**
  - **Verified via sampled signal phase analysis**
    - ***Acquired using SS&H techniques***

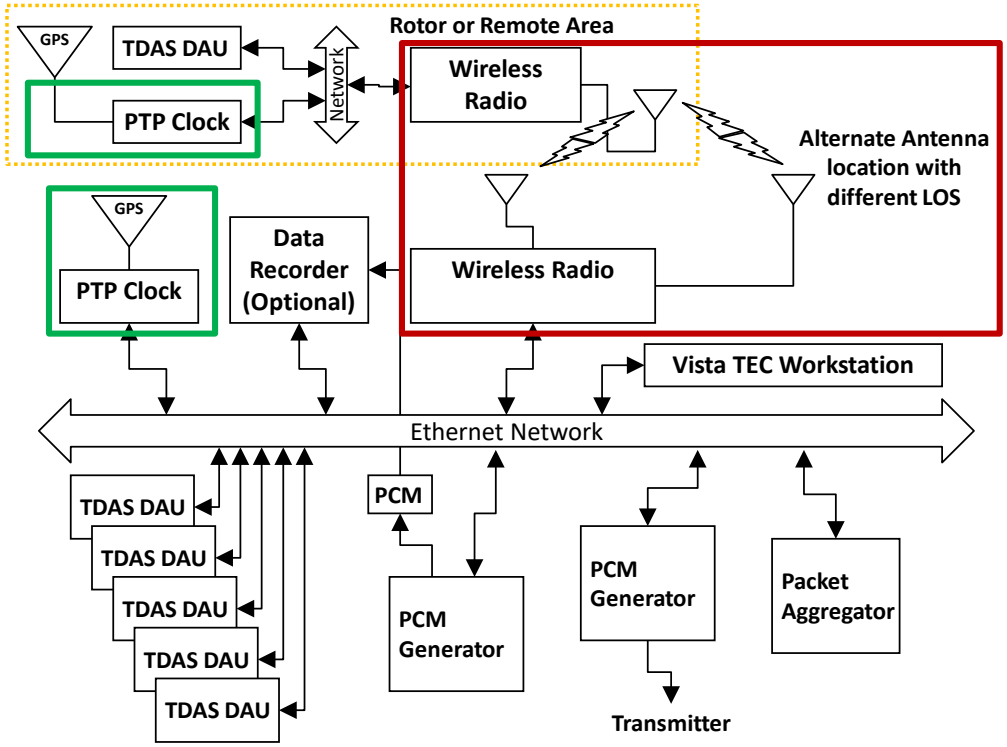

System Wide Simultaneous Sample and Hold

- **The ability of IEEE-PTP to synchronize SS&H is instrumental in solving a customer requirement to have synchronize data across DAU's over a wireless network**
  - **DAU encoder, sampling schedule and SS&H signals are all synchronized to the PTP subsystem**
  - **Results in superior phase correlation between any input signal applied to any signal conditioner in any DAU**
    - ***Including DAU's in remote sub-nets accessible via wireless links***

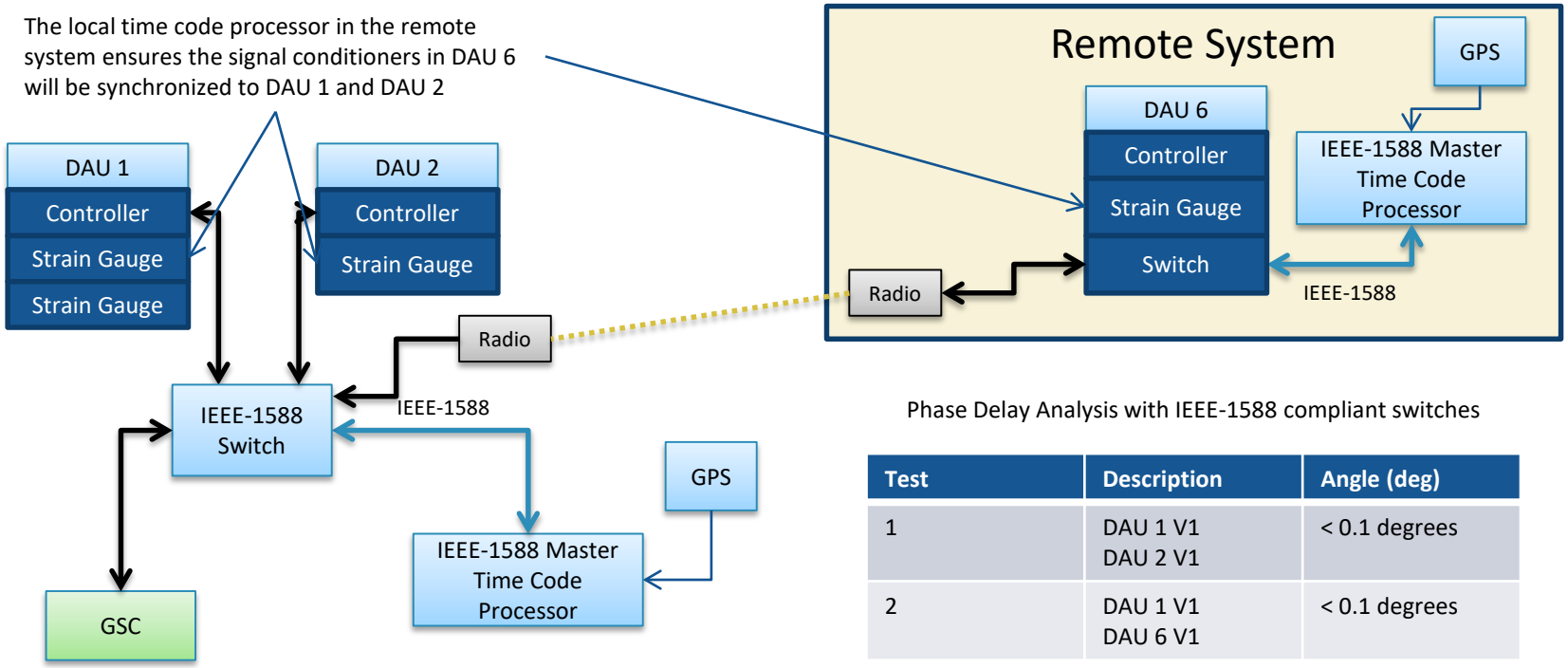

Phase Delay Analysis with IEEE-1588 compliant switches

Test	Description	Angle (deg)
1	DAU 1 V1 DAU 2 V1	< 0.1 degrees
2	DAU 1 V1 DAU 6 V1	< 0.1 degrees

TmNS Packets

The RCC Chapters 21-28 define the standards for an open interoperable network telemetry system

Chapter 21 Introduction	Chapter 22 Network Based Protocol Suite	Chapter 23 Configuration MDL	Chapter 24 Message Formats	Chapter 25 Management Resources	Chapter 26 TmNS Data Message Xfer Protocol	Chapter 27 RF Network Access Layer	Chapter 28 RF Network Management
TmNS System Concepts	Network Access Physical Layer	Schema	TmNS Message	Public RFC Management Resources (SNMP)	Data Channel Characteristics	Radio Network Access Concepts and Definitions	RF Network Management Concepts and Definitions
TmNS Core Technologies	Network Access Data Link Layers	Measurements	RF Network Message	TmNS Specific Management Resources (SNMP)	Metadata – Defined Application Data Transfer	Physical Layer	RF Media Access Control Layer
TmNS Definitions	Internet Layers (IPv4, IPv6, Transmission, Multicast, Routing)	Bus Configuration	TSS Messages	Management Resource Matrix	Request Defined Application Data Transfer	RF Burst Format	Logical Link Control Layer
Relationship between standards and specs	Transport Layer Protocols	Devices		Management Protocols (SNMP, TmNS, HTTP)	TmNS Message Transfer Rules	RF Media Access Control Frame Structure	Tunnel Management
	Application Layer Protocols	Network Node		Uniform Resource Name URN		Power Transients	
	TmNS App Protocols (SNMP, HTTP, RTSP, VOIP, File Transfer, …)						
	Quality of Service						

TmNS Packets

- **The DDN protocol was used by several of our Network Products as a way of transmitting network data**
  - **DAU's, Data Combiners, PCM to Network Gateways, Recorders, etc**
  - **Processing engine and display support**
- **The DDN Protocol had limitations in the form of**
  - **No support for 64-bit time**
  - **Was fixed to packetized PCM**
- **We saw two choices for supporting future needs**
  - **Improve DDN to include new features and provide more extensibility**
  - **Use TmNS**
- **TmNS was chosen**
  - **Open Standard which reduces risk for customers**
  - **Interoperability with the impending iNET Standards**
  - **Extensibility**
    - ***We could use the vendor specific fields to add quality of service metrics***
    - ***Supported packetized PCM and non PCM based telemetry***
    - ***Support for additional status information to help processing systems***
  - **TmNS is well designed and documented which reduces our R&D costs vs extending a proprietary format (we would have reinvented the wheel)**

Data Processing

- The TmNS packet format has efficient data processing characteristics
- 64bit IEEE-PTP time stamp format
- Time format and package rules help align packets from multiple sources
  - Build time correlated output streams
  - Produce network latency and health statistics
- The application defined fields are used for numerous purposes
  - Time stamps are added to help analyze network performance

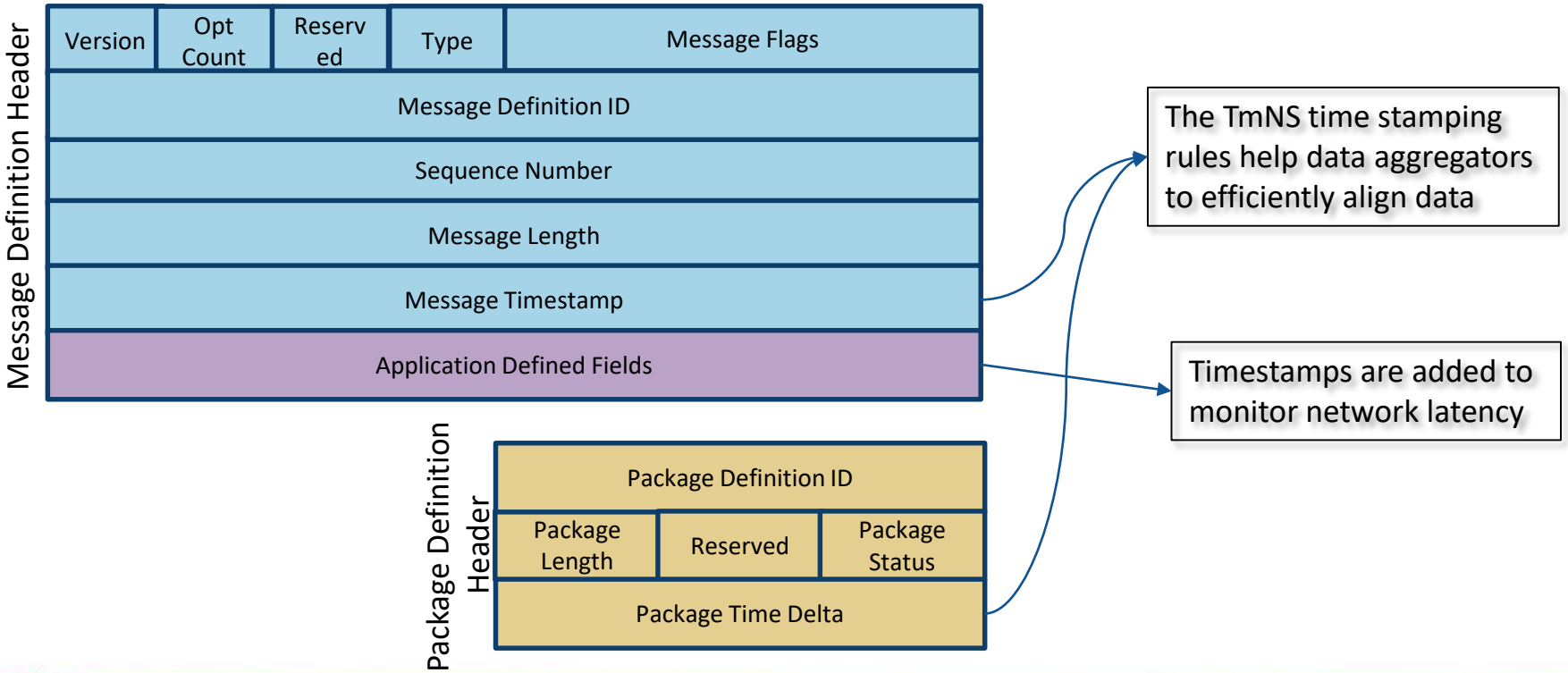

Network Gateway Processing

- **The Network Gateway is a Network to Network Data Processor**
  - **TmNS Timestamp rules help produce High Rate Data Aggregation**
  - **Build a composite output stream**
  - **Build a smaller cherry picked stream for safety of flight, low power devices, etc**
  - **Output stream can feed a PCM generation device**
- **Network to PCM Gateway**
  - **Consumes a single or multiple TmNS Data Stream**
  - **Outputs a time correlated PCM stream**

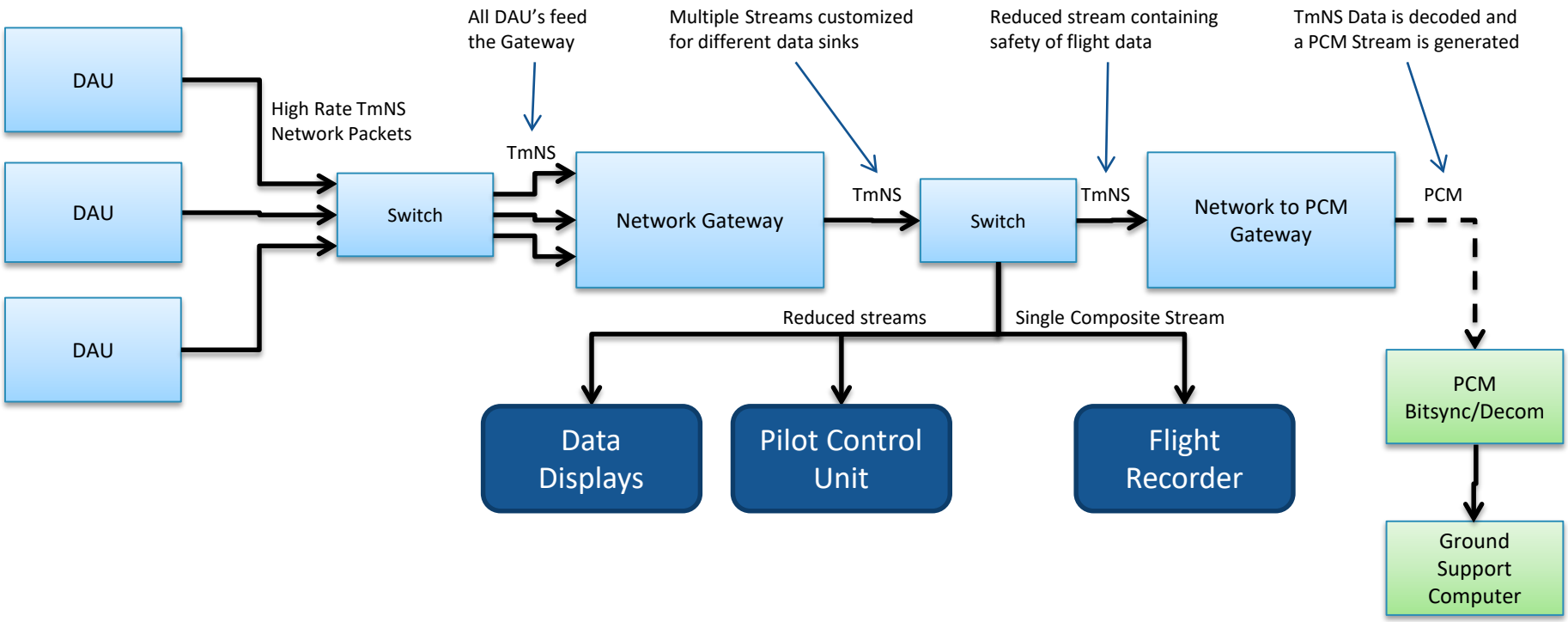

System Management Interfaces

The RCC Chapters 21-28 define the standards for an open interoperable network telemetry system

Chapter 21 Introduction	Chapter 22 Network Based Protocol Suite	Chapter 23 Configuration MDL	Chapter 24 Message Formats	Chapter 25 Management Resources	Chapter 26 TmNS Data Message Xfer Protocol	Chapter 27 RF Network Access Layer	Chapter 28 RF Network Management
TmNS System Concepts	Network Access Physical Layer	Schema	TmNS Message	Public RFC Management Resources (SNMP)	Data Channel Characteristics	Radio Network Access Concepts and Definitions	RF Network Management Concepts and Definitions
TmNS Core Technologies	Network Access Data Link Layers	Measurements	RF Network Message	TmNS Specific Management Resources (SNMP)	Metadata – Defined Application Data Transfer	Physical Layer	RF Media Access Control Layer
TmNS Definitions	Internet Layers (IPv4, IPv6, Transmission, Multicast, Routing)	Bus Configuration	TSS Messages	Management Resource Matrix	Request Defined Application Data Transfer	RF Burst Format	Logical Link Control Layer
Relationship between standards and specs	Transport Layer Protocols	Devices		Management Protocols (SNMP, TmNS, HTTP)	TmNS Message Transfer Rules	RF Media Access Control Frame Structure	Tunnel Management
	Application Layer Protocols	Network Node		Uniform Resource Name URN		Power Transients	
	TmNS App Protocols (SNMP, HTTP, RTSP, VOIP, File Transfer, …)						
	Quality of Service						

System Management Interfaces

System Management defines standard MIBs to ensure basic level of functionality amongst network nodes

The standard MIBs provide access to information that should be readily available to device manufacturers and ensures the usage of common network tools from the commercial industry

In practice we found that rather than discovering L3 devices we found

- L3 Network Devices
- Customer Devices
- Other Vendor Devices

This was a value add that we had not initially anticipated

- The discovery helps the customer to ensure all devices (not just L3) on the test article are powered on and running and rely on this information during pre-flight checkout

System Management Tools

- **TDAS Manager (TDASM) is an L3 developed system management tool**
  - **Conforms to the System Management standard**
  - **Provides device discovery and management capabilities including**
    - ***IP Network Configuration***
    - ***Device configuration and control***
      - **Either individually or in parallel to selected device subsets**
    - ***Alert and notification management***
- **Scalable Server Design**
  - **Runs on the Ground Support Computer**
  - **When no GSC is available, the server runs on any of the red highlighted controllers at the users discretion**

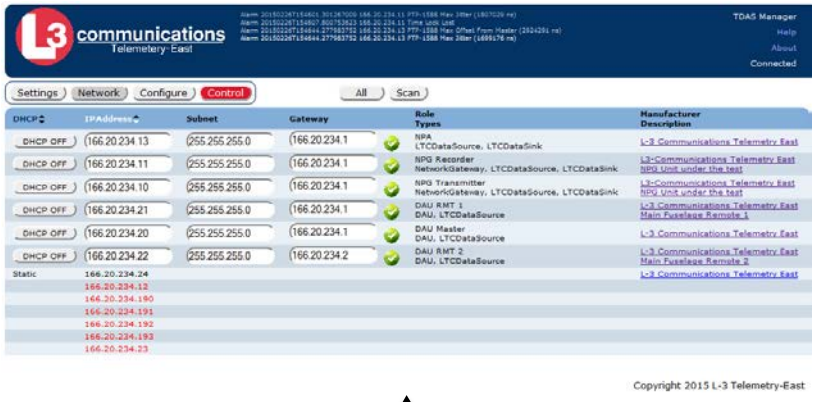

TDASM Server

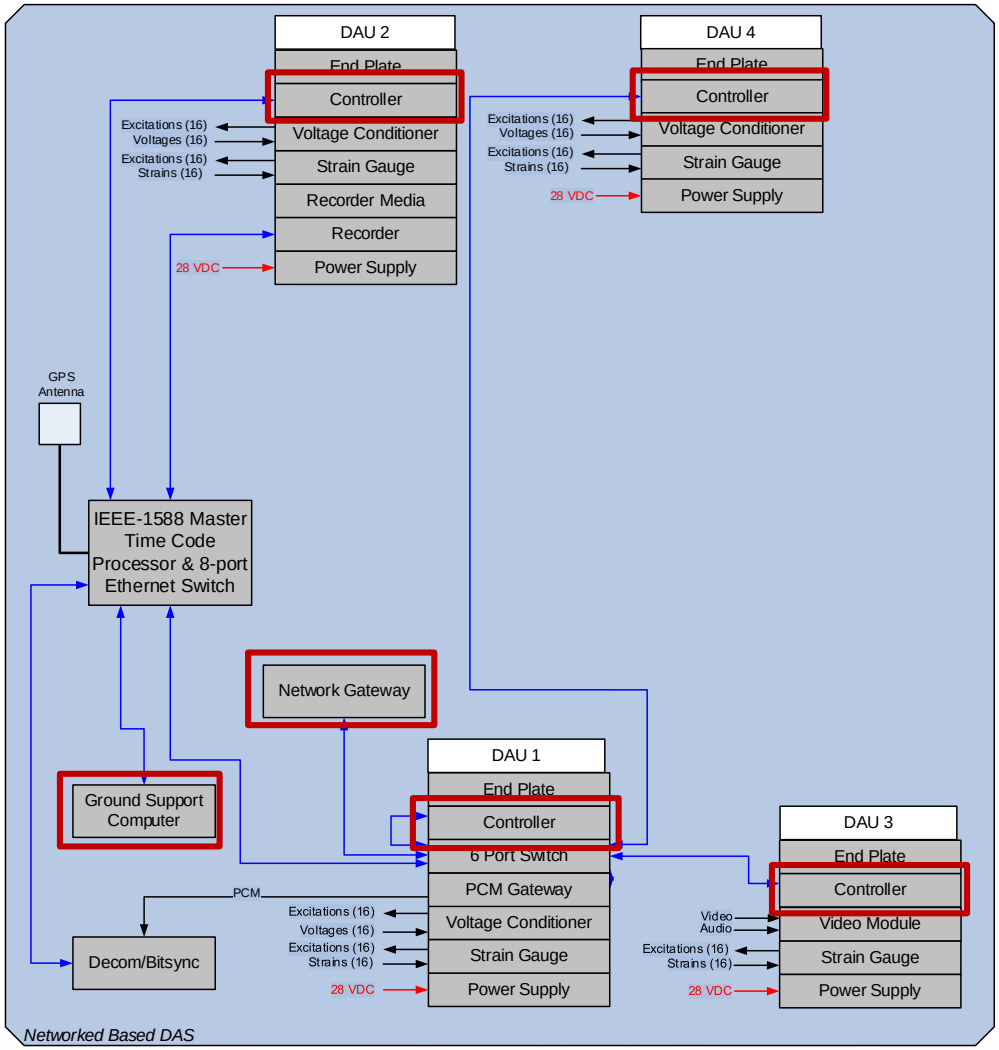

Customer Hardware Integration

- **Some customers build their own equipment**
- **System Management Interfaces enable their components to seamlessly integrate with our System Manager tool**
  - **Reduces cost for the user by making the System Manger the UI for their component**
    - ***Initiate Configuration and display errors***
    - ***Network IP Management***
    - ***Command and Control***
    - ***Alert and Notification displays***
    - ***Discovery***
    - ***Statistics***
  - **Automatically integrated into the larger telemetry system**
  - **Reduced training for users by using the same tools for different equipment**
- **Less risk for the customer because they are building to open standards**

Customer Hardware Integration

When customers implement the System Management Interfaces they benefit from automatic software integration

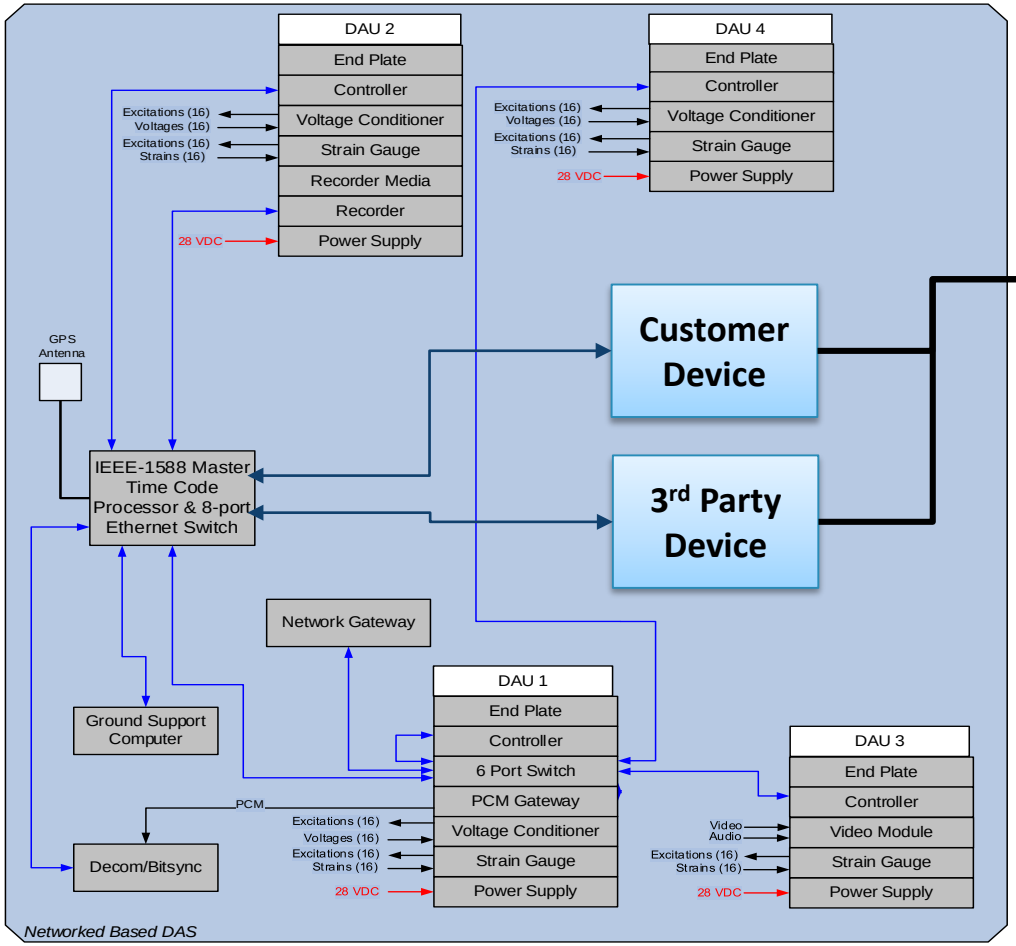

Automatic Integration with the System Manager

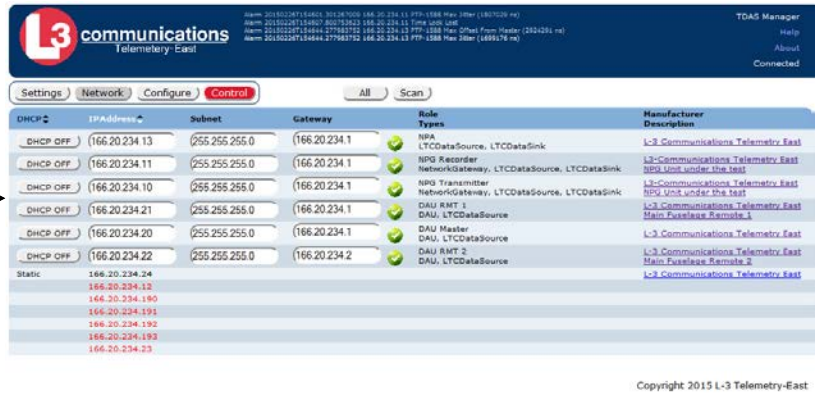

When using the same user interface

- Users use the same tool
- Less training
- Less risk

Status and Quality of Service

The RCC Chapters 21-28 define the standards for an open interoperable network telemetry system

Chapter 21 Introduction	Chapter 22 Network Based Protocol Suite	Chapter 23 Configuration MDL	Chapter 24 Message Formats	Chapter 25 Management Resources	Chapter 26 TmNS Data Message Xfer Protocol	Chapter 27 RF Network Access Layer	Chapter 28 RF Network Management
TmNS System Concepts	Network Access Physical Layer	Schema	TmNS Message	Public RFC Management Resources (SNMP)	Data Channel Characteristics	Radio Network Access Concepts and Definitions	RF Network Management Concepts and Definitions
TmNS Core Technologies	Network Access Data Link Layers	Measurements	RF Network Message	TmNS Specific Management Resources (SNMP)	Metadata – Defined Application Data Transfer	Physical Layer	RF Media Access Control Layer
TmNS Definitions	Internet Layers (IPv4, IPv6, Transmission, Multicast, Routing)	Bus Configuration	TSS Messages	Management Resource Matrix	Request Defined Application Data Transfer	RF Burst Format	Logical Link Control Layer
Relationship between standards and specs	Transport Layer Protocols	Devices		Management Protocols (SNMP, TmNS, HTTP)	TmNS Message Transfer Rules	RF Media Access Control Frame Structure	Tunnel Management
	Application Layer Protocols	Network Node		Uniform Resource Name URN		Power Transients	
	TmNS App Protocols (SNMP, HTTP, RTSP, VOIP, File Transfer, …)						
	Quality of Service						

Status and Quality of Service

- PCM Systems are deterministic systems, in contrast networks are nondeterministic
- Network data packets can be held up or lost
- To monitor the systemic health of the system the RCC standards offer some tools
- System Management Interfaces
  - Statistics for monitoring how much data is transmitted
  - Table of packet errors, data lost
  - Transmission control
- TmNS Packet Format
  - Methodology to avoid UDP Packet Fragmentation
  - Methodology to watch for dropped packets
  - Ability to record ingress and egress timestamps to accurately monitor network latency

Status and QoS Management

The System Management MIB has support for statistics for both sources and sinks

Data Sink
tmnsLTCDataSink – Defines the component as a device that can receive data packets

Data Source
tmnsLTCDataSource – Defines the device as a data source that can produce UDP traffic

Should equal out

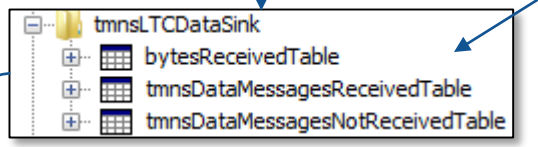

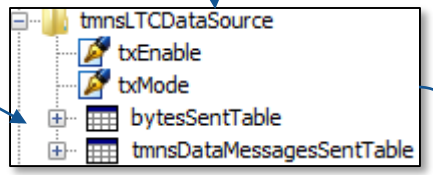

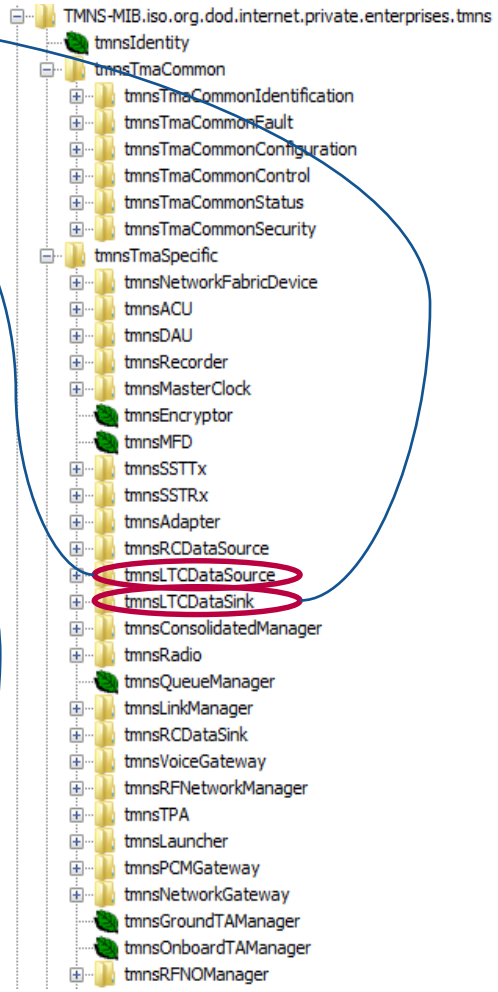

Variable	Description
txEnable	Start and stop transmission
txMode	Set whether real or simulated mode (not defined)
BytesSentTable	Bytes set per destination address and message ID
tmnsDataMessageSentTable	Messages set per destination address and message ID
bytesReceivedTable	The number of bytes received by this data source
tmnsDataMessagesReceivedTable	Messages received per destination address and message ID
tmnsDataMessagesNotReceivedTable	Messages not received per destination address and message ID

System Latency

- **Understanding where latency occurs can help understand Quality of Service (QoS) issues**
- **Our equipment makes use of the TmNS format's optional vendor fields**
  - **Timestamp when Ethernet driver sends packets**
  - **Timestamp when Ethernet driver receives data**
- **Our network to network gateway generates measurements based on the transmit and receive timestamps and inserts them into the output telemetry stream**

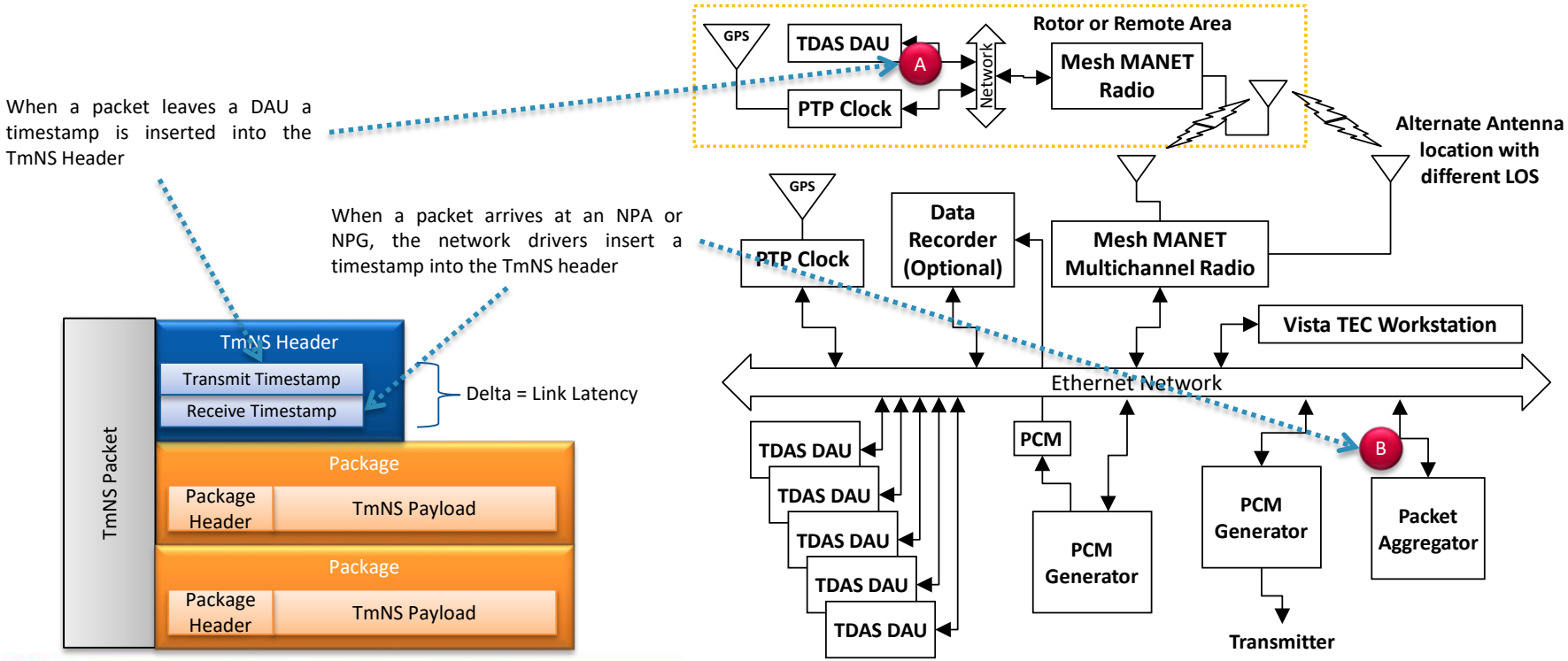

Summary

- In the presentation we covered the changes that were made to an existing telemetry system to better support the emerging RCC network standards
- We covered the RCC chapters
- We also covered hardware changes that were implemented to meet some of the requirements of the new chapters
- We discussed software systems that take advantage of the new interfaces and standard data formats
- Questions?

Thank You!

Telemetry & RF Products

9020 Balboa Ave.
San Diego, CA 92123
Tel: 858.694.7500

1515 Grundy's Lane
Bristol, PA 19007
Tel: 267.545.7000

Sales.TRF@L3t.com

L-3com.com/TRF