22nd ITEA Workshop, May 2018

Doppler Compensation for LTE-Based Aeronautical Mobile Telemetry

William H. Johnson and Kiran M. Rege, PhD

VENCORE LABS
formerly Applied Communication Sciences

Acknowledgement
Effort sponsored by the U.S. Government under Other Transaction number W15QKN-15-9-1004 between the NSC, and the Government. The US Government is authorized to reproduce and distribute reprints for Governmental purposes notwithstanding any copyright notation thereon.

The Need for Doppler Estimation and Compensation

- One of the key performance-limiting factors in the implementation of LTE-based airborne telemetry systems is the high Doppler shift experienced by the TA and base station transceivers.
  - Standard LTE systems are not designed for very high Doppler shifts. (They are designed to handle Doppler shifts for speeds up to 350 kmph.)
  - At high Doppler shifts, TAs cannot access base stations even at high SNRs.
- Our two-pronged approach to the Doppler Problem:
  - Proactively directed handovers to preferably connect to base stations that have low Doppler shifts as well as good SNR; and
  - Doppler estimation and compensation at the TA. (Needed because proactively directed handovers cannot completely overcome the Doppler problem.
- Two possible implementations:
  - **Downlink-based** – requires indication of desired signal
  - **Uplink-based** – does not require indication of desired signal; exploits the fact that the TA receiver derives its frequency reference from the DL signal.

Standard LTE Transceiver Limitations

- TA can compensate large frequency offsets (can see many eNBs)
  - TA frequency locks onto the eNB it selects
- eNB cannot compensate large frequency offsets
  - Designed to handle many UEs.
  - TA has locked to eNB and uplink can be out of eNB's locking capability

TA Speed (Knots)	Doppler (Hz)	
	L-Band	C-Band
384.3	1,000	2,900
768.6	2,000	5,800
1537.2	4,000	11,600

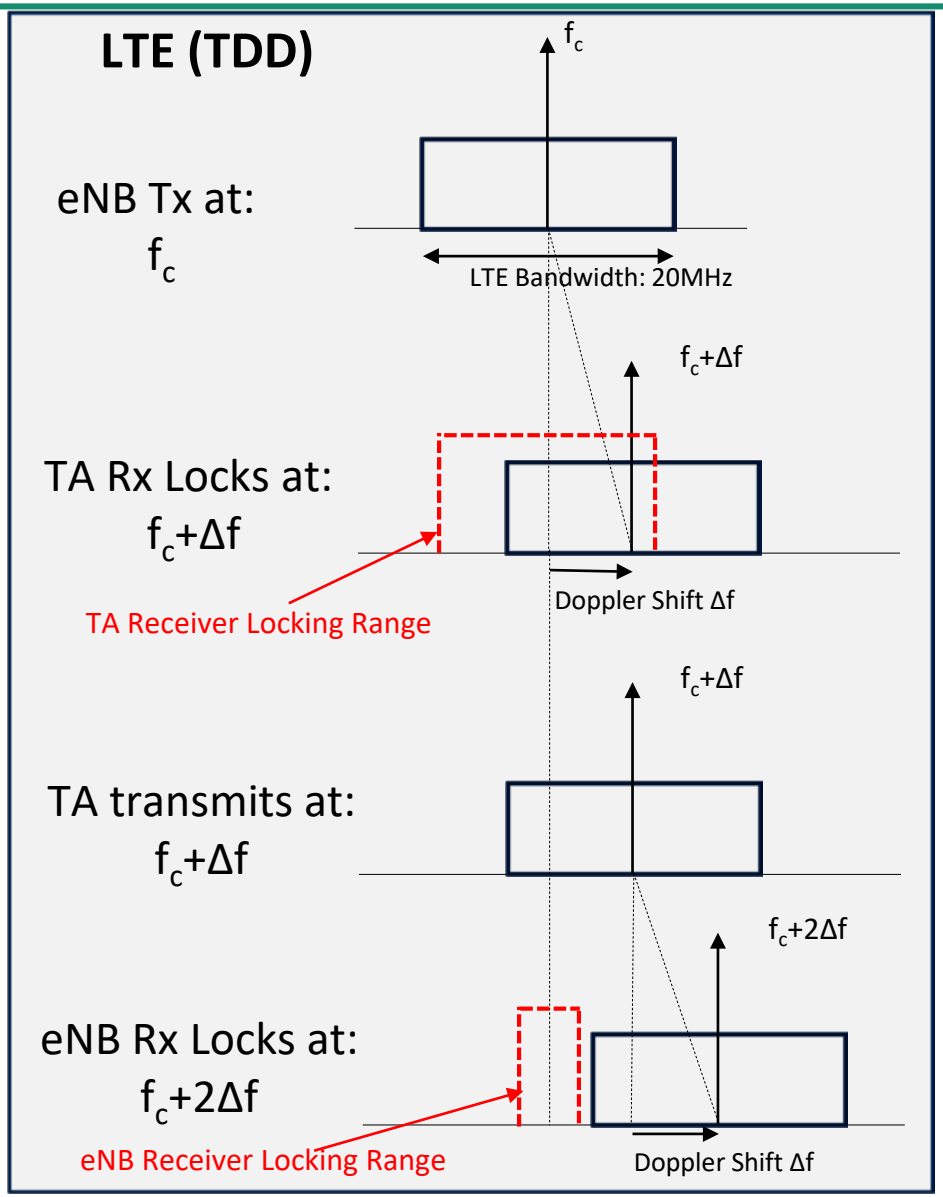

A Doppler Compensation Appliqué

- Uses the uplink signal transmitted by the TA to estimate the Doppler shift
- Does not need indication of the desired base station
- Operates in a completely asynchronous manner
- Can be added to any standard LTE User Equipment (UE) device
  - With the current prototype implementation, Doppler shifts of up to 5 kHz (Mach 3 in L-Band and 1 in C-Band) can be handled
- Based on COTS Software Defined Radio (SDR) hardware
  - FPGA implementation on SDR for real-time operation
- Capable of rapid tracking of Doppler for high-speed operation
- In lab tests, showed residual error of at most a few hundred Hz, well within the capability of base station receivers.

The Appliqué-Based Solution to the Doppler Problem

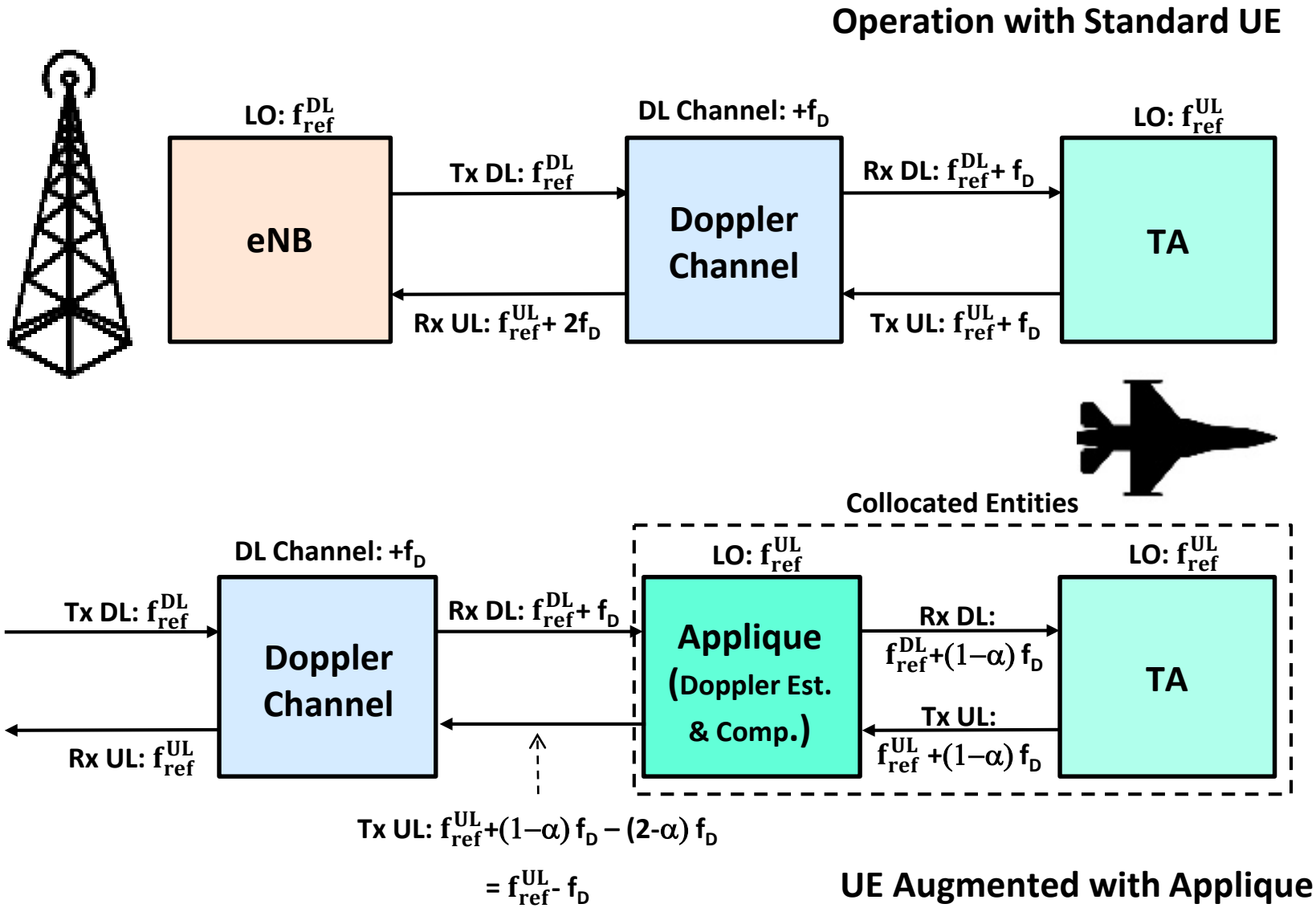

VENCORE LABS

A High-Level View of the Doppler Estimator-Compensator

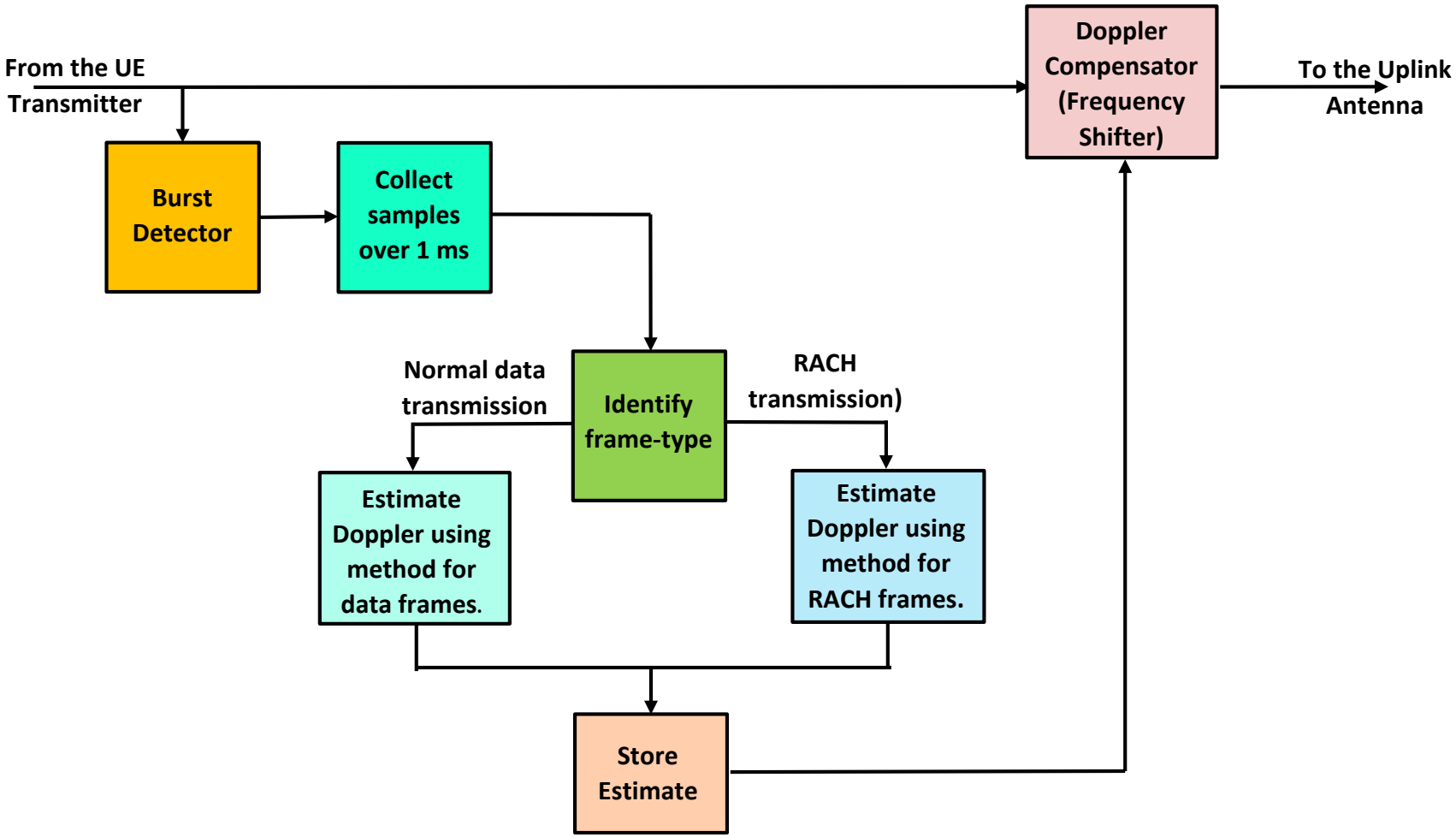

Timeline of Applique Operation

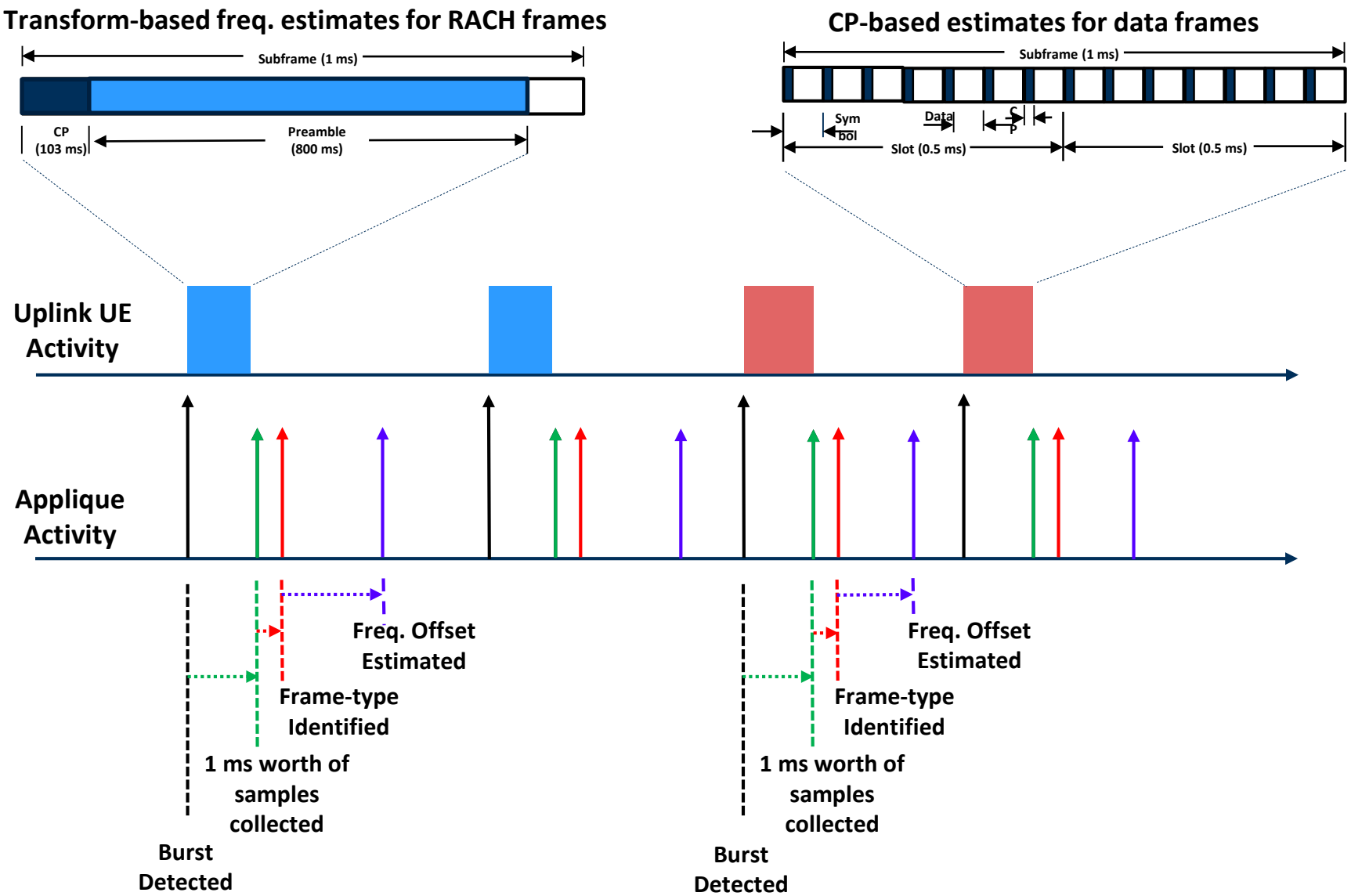

VENCORE LABS

An Example

- TA starts at Point A with zero speed.
- The trajectory ends at Point B.
- TA follows the shown trajectory, increasing its speed along the way.
- There are two base stations whose signals are received by the TA.

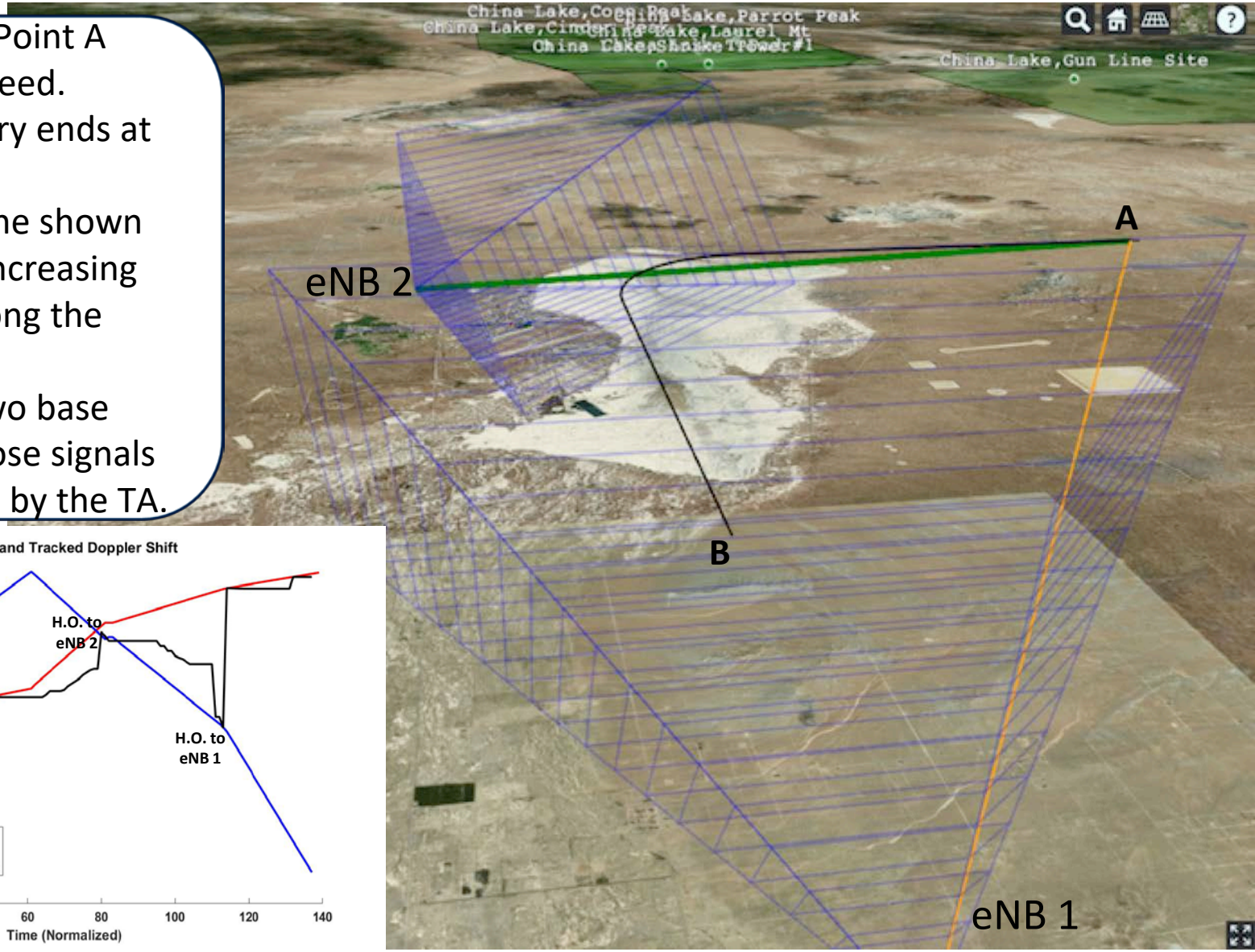

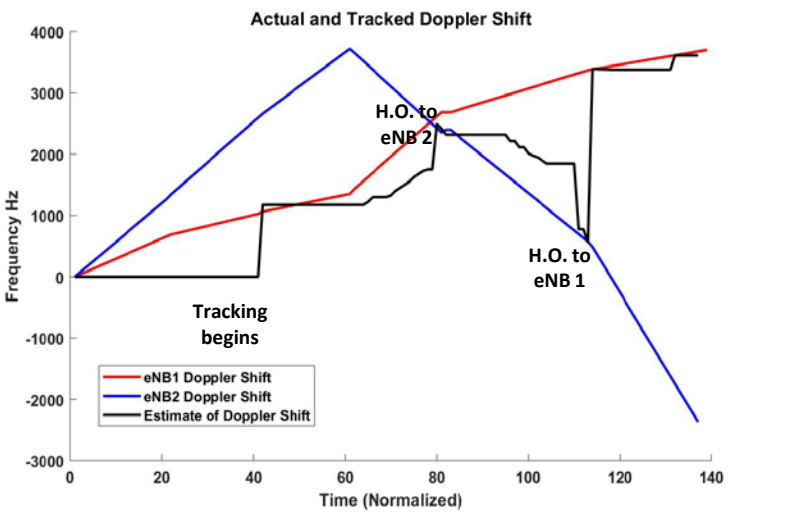

Conclusion

- The viability of Airborne Mobile Telemetry based on 3GPP's LTE standard is severely limited by the very high Doppler shifts encountered at the TA and base station ends.
- Vencore Labs' dual approach comprising proactively directed handovers and Doppler estimation/compensation is designed to overcome the Doppler problem that is particularly felt at the base station receiver.
- Experiments with laboratory prototype have demonstrated the ability of the Doppler estimator/compensator to handle Doppler shifts up to 5 kHz. The residual error is typically on the order of a few tens of Hz.